Wheel Kaddy Owners' Manual

250 Series / 500 Series / 360 Series

Contents

360 Series Installation Instructions 3
1. Install The Mount 3
2. Assemble The Arm 4
3. Install The Tires 5
4. Hook Up The Kaddy & Adjust 6
500 Series Installation Instructions 8
1: Install The Mount 8
2: Install Tires and Mount 9
3: Check Clearance and Adjust Pitch 10
4: Adjust Tension, Distance and Stops 11
250 Series Installation Instructions 13
1: Install The Mount 13
2. Assemble The Arm 14
3. Install The Tires 15
4. Hook Up The Kaddy & Adjust 16

360 Series Installation Instructions

1. Install The Mount

1. Install Mount onto mower. Some mounts will require drilling. In order to properly allow the tire to swing underneath the 360 Arm Assembly, the proper height must be maintained. Refer to the chart below for the recommended mounting heights. Clamp the mount at the desired location using a set of vice grips. Then, as long as your tire swings underneath, and there are not interferences with handlebars or drive linkage when the Kaddy is up in the storage position, drill holes and bolt the mount onto the mower.

Check For Interferences

	13" Tire	11" Tire	10" Tire
MAX Mount Height	15"	14"	13 ½"
MIN Mount Height	14 ½"	13"	12"

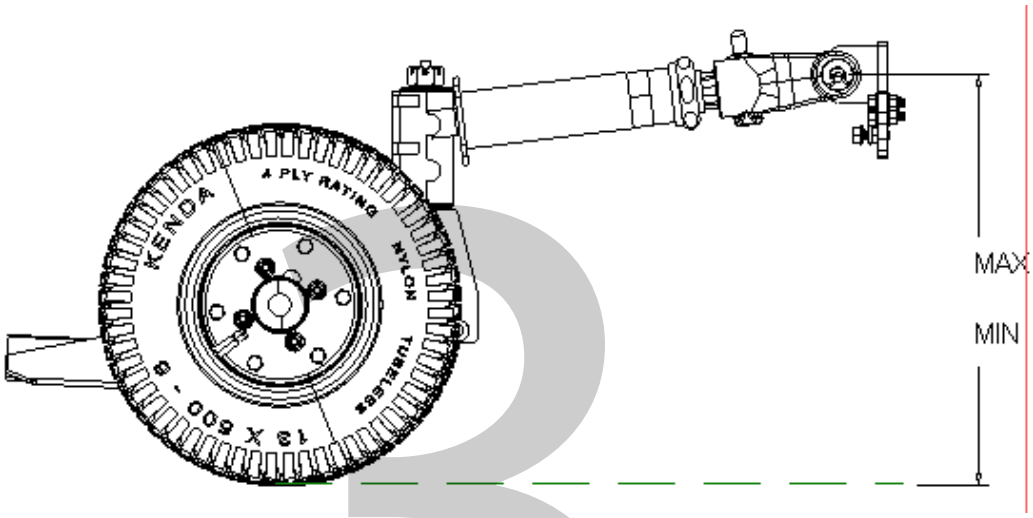

2. NOTE: for S-Series ExMark mowers, you may be required to move the mount up and drill extra holes. If you are utilizing the 13" (13x5.00-6) tires, you will need to install the mount higher than the factory holes in the mower.

2. Assemble The Arm

3. Remove Arm Assembly from packaging

4. Install 3/8" hex bolts loosely, connecting the telescoping arm to the vertical pivot using the lock plates. Leave nuts loose so that you can adjust vertical pivot later.

5. Remove large bushing and small locknut

6. Insert 360 Arm Assembly into the Platform pivot tube. Loosely install the large bushing, ½" washer and locknut.

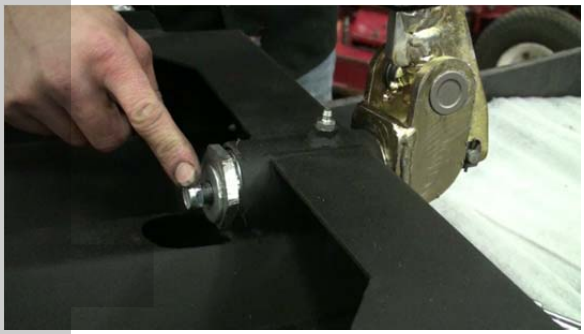

3. Install The Tires

7. Install wheel assemblies onto both axles. NOTE: When using the 3-piece tapered roller bearing set, make sure that the grease seal is fully seated onto the axle shoulder. There should be a very small gap between the platform and tire as shown.

8. After confirming that the grease seal is securely seated insert the bearing and cotter pin through the axle.

9. Tighten the castle nut down snugly. Do not overtighten. Bend the tab of the cotter pin into the nearest slot of the nut. This will prevent the nut from becoming loose.

10. Install grease caps on both tires. To prevent denting of the cap, use a large socket while tapping gently with a hammer.

4. Hook Up The Kaddy & Adjust

11. Hook the assembled Wheel Kaddy into the quick release mount.

12. Adjust the distance from the mower: Determine a comfortable standing distance from the operator controls of the lawn mower. Tighten the large compression nut.

13. Adjust the Vertical Pivot to be as close to vertical as possible. This is critical so that the level of the Kaddy Platform does not change as it swings around the vertical pivot. Tighten nuts snugly onto the Lock Plates.

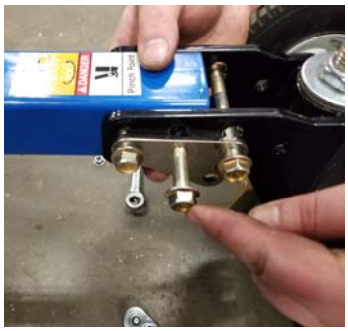

14. Tighten large bushing snugly. Tighten ½" pitch adjustment locknut until the Kaddy Platform becomes level, or pitched slightly forward, so that the heels of the operator are elevated. Refer to the below diagram for proper pitch.

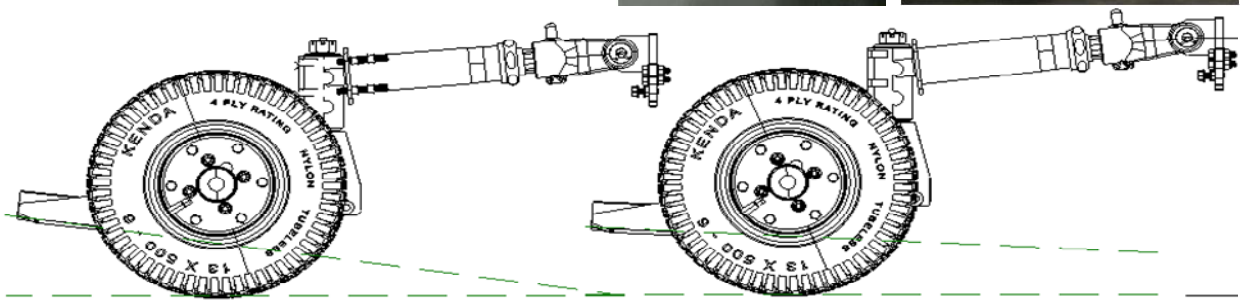

Too Much Pitch

Preferred Pitch (only slightly forward)

15. The Wheel Kaddy suspension is preset to a medium preload. If more or less preload ('stiffness') is preferred, adjust the preload tension nut shown. The closer the nut is to the spring, the higher the pre-load tension will be.
16. To adjust, remove the ½" pitch adjustment nut, then remove the pin from the clevis allowing you to remove the threaded rod and clevis from inside the tube. Turn the tension nut a couple of turns, re-install and test.

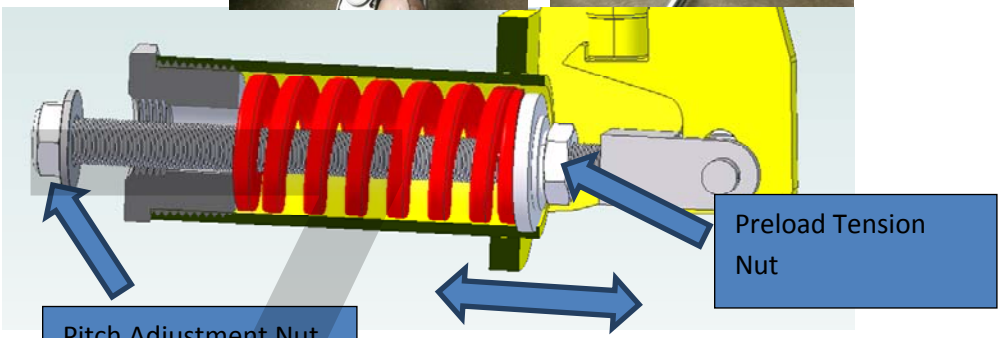

17. Loop storage chain through handlebars and use carabiner hook to secure. Different mower models may require other methods to attach the chain. Use a bolt cutter or other tool to cut off extra chain.

500 Series Installation Instructions

1: Install The Mount

1: Install mount with bolts provided. If the universal mount is being used, refer to the "Top Height adjustment". Page 32 of this manual for proper mounting height.

2: Install arm assembly into quick release coupler. Install wheels on platform.

3: NOTE: When using the 3-piece wheel assemblies make sure that the grease seal is fully seated onto the axle shoulder. There should be a very small gap between the platform and tire as shown.

2: Install Tires and Mount

4: Install tapered roller bearing at the front.

5: Carefully tighten castle nut. Tighten enough to snug up the bearings without causing unnecessary friction. Wheel must spin freely. Once the proper torque is obtained install cotter pin through the axle to secure the castle nut.

6: Carefully tap hub cap into place with rubber mallet.
Follow the same procedure for each wheel.
NOTE: Using a large impact socket over the dust cap during installation can help prevent damage from the hammer.

7: Install Kaddy platform. Loosely thread end nut to temporarily secure.

3: Check Clearance and Adjust Pitch

8: Turn Kaddy to the side to check for clearance against the machine and the tire.

9: If there is contact between the machine and the Kaddy before it reaches 90 degrees, adjust the placement of the two bolts shown to increase the distance between the tire and machine.

10: Adjust the pitch (level) of the platform by Increasing or decreasing the distance between the clevis (A) and the spring retaining nut (B).

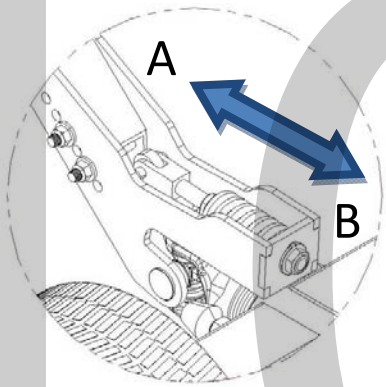

4: Adjust Tension, Distance and Stops

11: Adjust spring tension for the operator weight by turning the tension nut as shown.

12: Further adjust the distance from the controls by moving washers from the front to the back as needed. NOTE: the further the platform is back the easier it is to back up without jack-knifing. DO NOT OVER-TIGHTEN LOCKING NUT.

13: Install stops onto platform and adjust as shown.

14: Thread chain through handlebars, and hook together with the hook provided. Be sure that the proper length is obtained and then clip off excess chain.

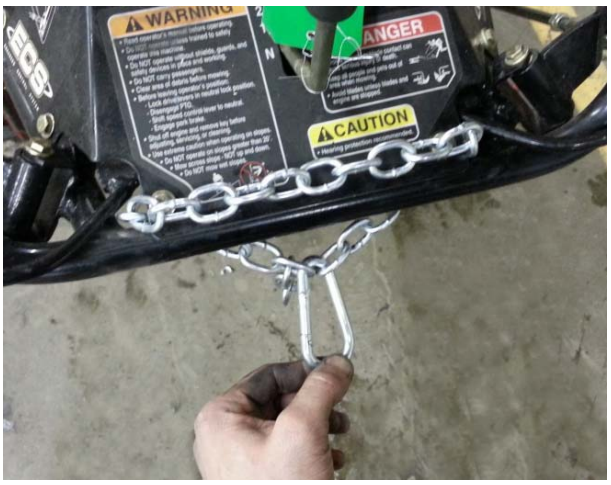

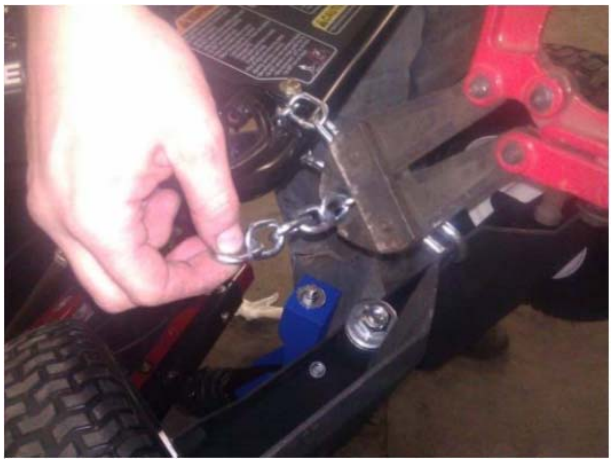

250 Series Installation Instructions

1: Install The Mount

1. Install Mount onto mower. Some mounts will require drilling. Refer to the chart below for the recommended mounting heights. Clamp the mount at the desired location using a set of vice grips. Then, as long as there are not interferences with handlebars or drive linkage when the Kaddy is up in the storage position, drill holes and bolt the mount onto the mower.

	13" Tire	11" Tire	10" Tire
MAX Mount Height	15 3/8"	15 3/8"	15 3/8"
MIN Mount Height	9 3/8"	9 3/8"	9 3/8"

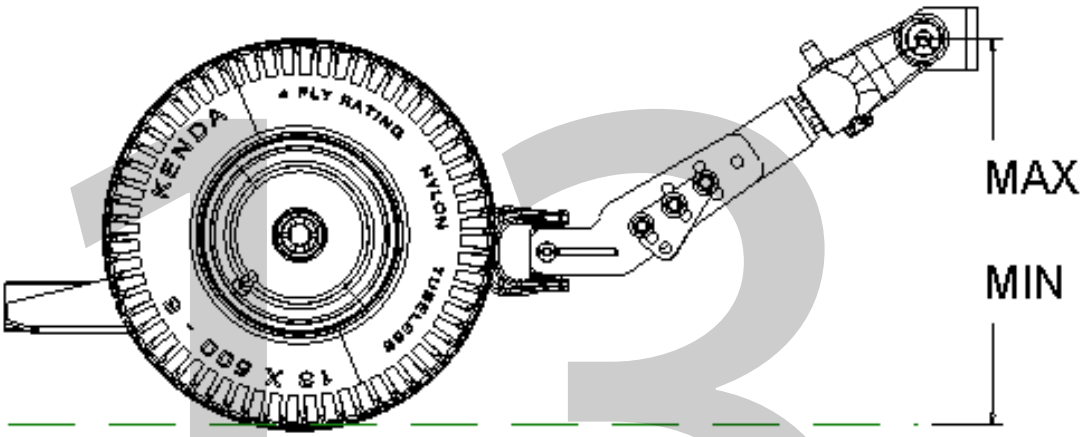

2. Assemble The Arm

2. Remove Arm Assembly from packaging

3. Remove 3 bolts and the lock plates. Re-insert the Upper Arm, and install one bolt loosely through the arm assembly as pictured.

4. Insert 250 Arm Assembly through the pivot bearings in the Platform. Loosely install ¾" locking nut.

3. Install The Tires

5. Install wheel assemblies onto both axles. NOTE: When using the 3-piece tapered roller bearing set, make sure that the grease seal is fully seated onto the axle shoulder. There should be a very small gap between the platform and tire as shown.

6. After confirming that the grease seal is securely seated insert the bearing and cotter pin through the axle.

7. Tighten the castle nut down snugly. Do not overtighten. Bend the tab of the cotter pin into the nearest slot of the nut. This will prevent the nut from becoming loose.

8. Install grease caps on both tires. (not applicable for the one-piece ball bearing wheels) To prevent denting of the cap, use a large socket while tapping gently with a hammer.

4. Hook Up The Kaddy & Adjust

9. Hook the partially assembled Wheel Kaddy into the quick release mount.

10. Adjust the distance from the mower: Determine a comfortable standing distance from the operator controls of the lawn mower. If the medium position is not comfortable, remove the 3/8" bolt and re-align the holes at a different location. The washers can also be used to fine-tune the distance adjustment.

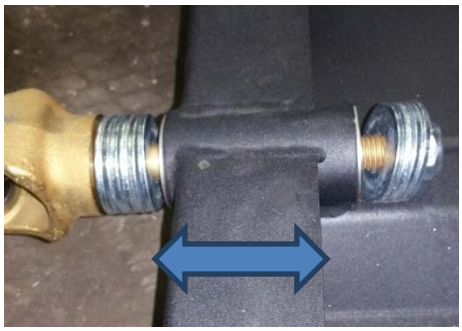

11. Pivot the arm on the 3/8" bolt until the Platform is level, or pitched slightly forward for maximum operator comfort.

Kage Innovation® LLC
www.kageinnovation.com
(844) 314 - KAGE

12. Install 2 remaining 3/8" bolts, and lock plates to secure arm adjustment. Tighten remaining loose hardware.

13. Loop storage chain through handlebars and use carabiner hook to secure. Different mower models may require other methods to attach the chain. Use a bolt cutter or other tool to cut off extra chain.

Wheel Kaddy 360
WHK-360

Version# 1

Version Starting Serial #

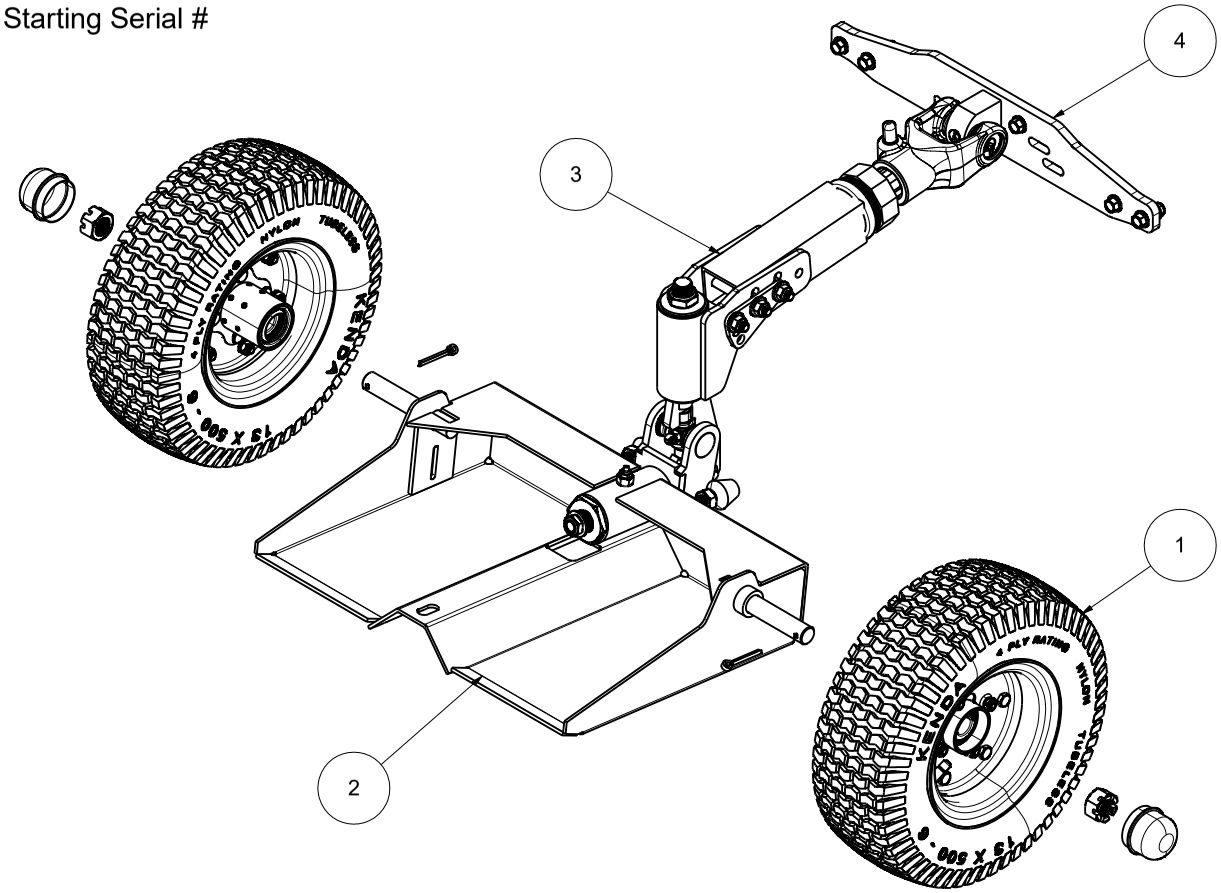

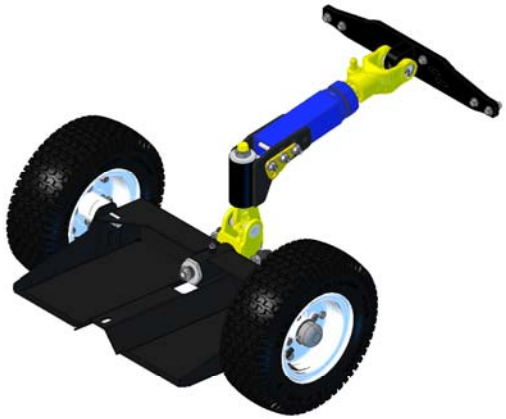

Item Number	Part Name	Part Number	Quantity
1	Choose from Tire Options		2
2	Wheel Kaddy Platform Assembly	WHK-P500	1
3	Arm Assy 360	ARM360	1
4	Choose from Mount Options		1

Copyright Kage Innovation All Rights Reserved www.kageinnovation.com (844) 314-KAGE

Part Name: **Wheel Kaddy 500**
Part Number: **WHK-500-UNIVERSAL**
Part Revision:

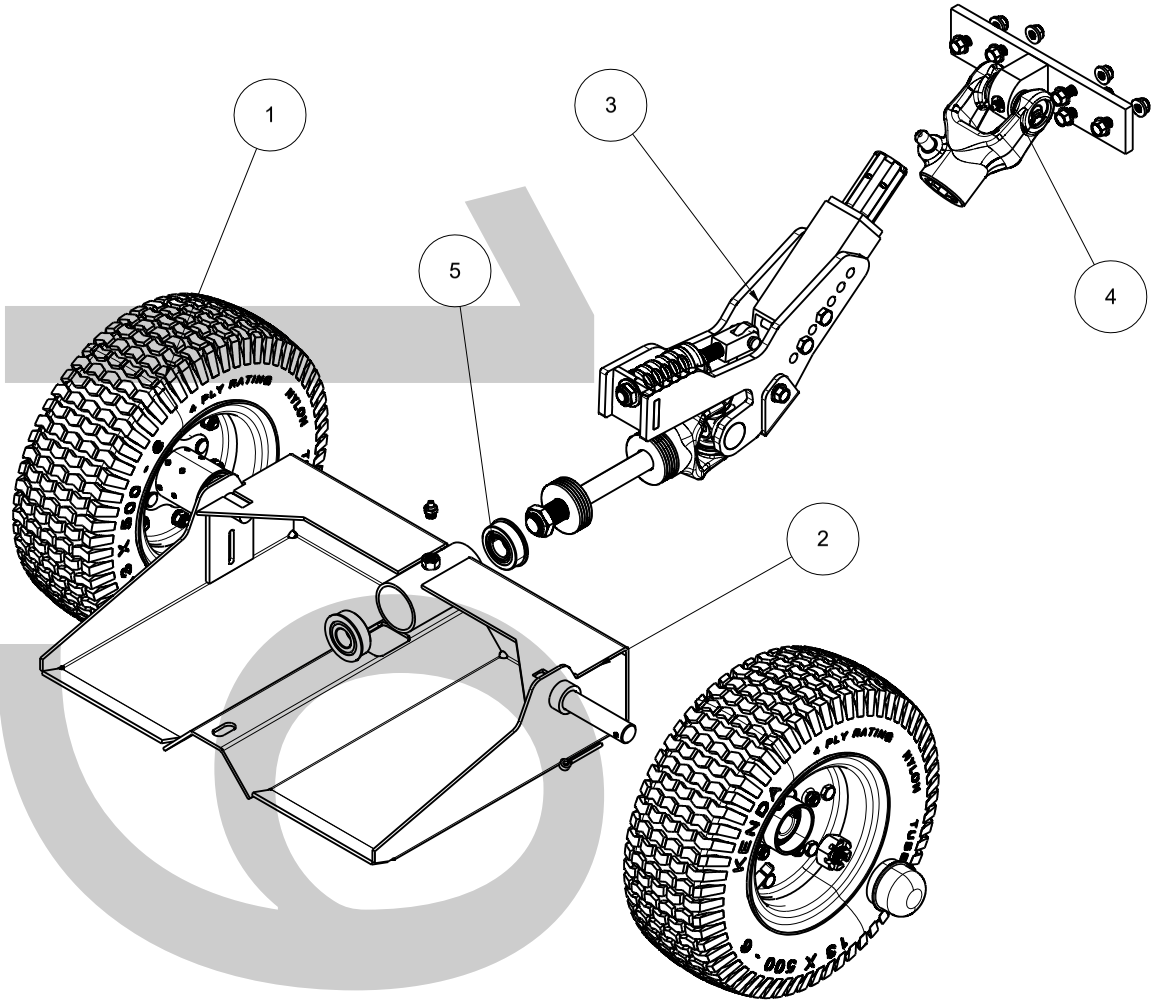

Item	Part Name	Part Number	Quantity
1	Choose from Tire Options		2
2	Wheel Kaddy Platform Assembly	WHK-P500	1
3	Arm Assembly	ARM500	1
4	Choose from Mount Options		1
5	Flange Ball Bearing	6384K369	2

Copyright Kage Innovation All Rights Reserved

WEIGHT LBS

Wheel Kaddy 250
WHK-250

Version#

Version Starting Serial #

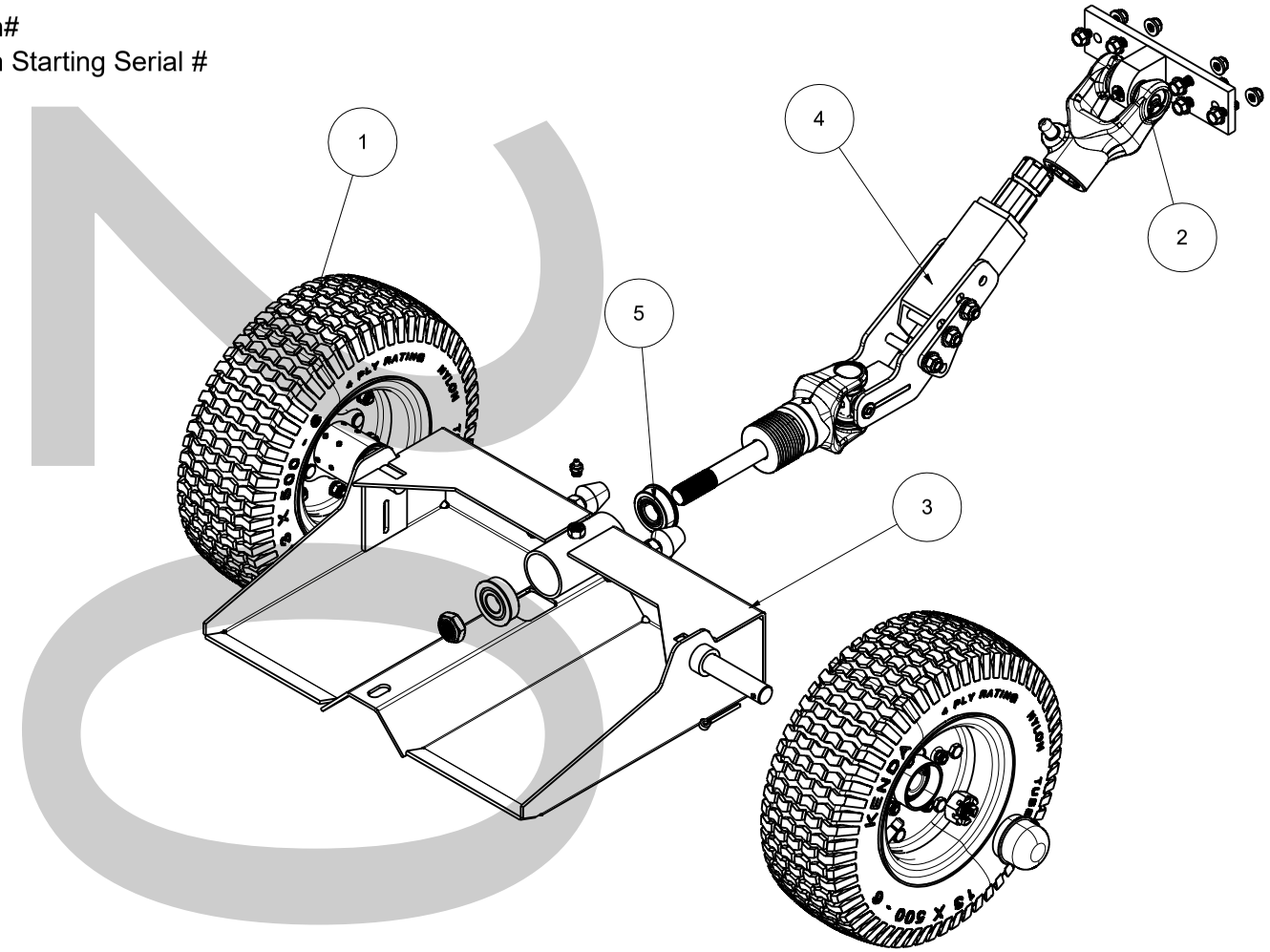

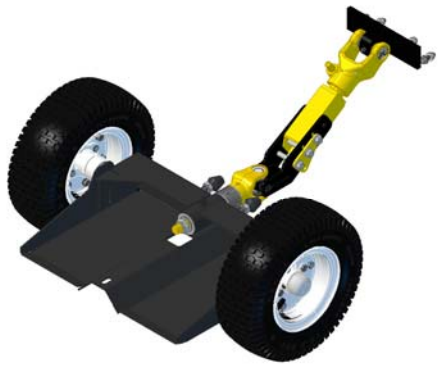

Item	Part Name	Part Number	Quantity
1	Choose from Tire Options		2
2	Choose from Mount Options		1
3	Wheel Kaddy Platform Assembly	WHK-P500	1
4	Arm Eco Assy	ARM250	1
5	Flange Ball Bearing	6384K369	2

Copyright Kage Innovation All Rights Reserved www.kageinnovation.com (844) 314-KAGE

Wheel Kaddy Platform Assembly
WHK-P500

Version# 360.1

Version Starting Serial #

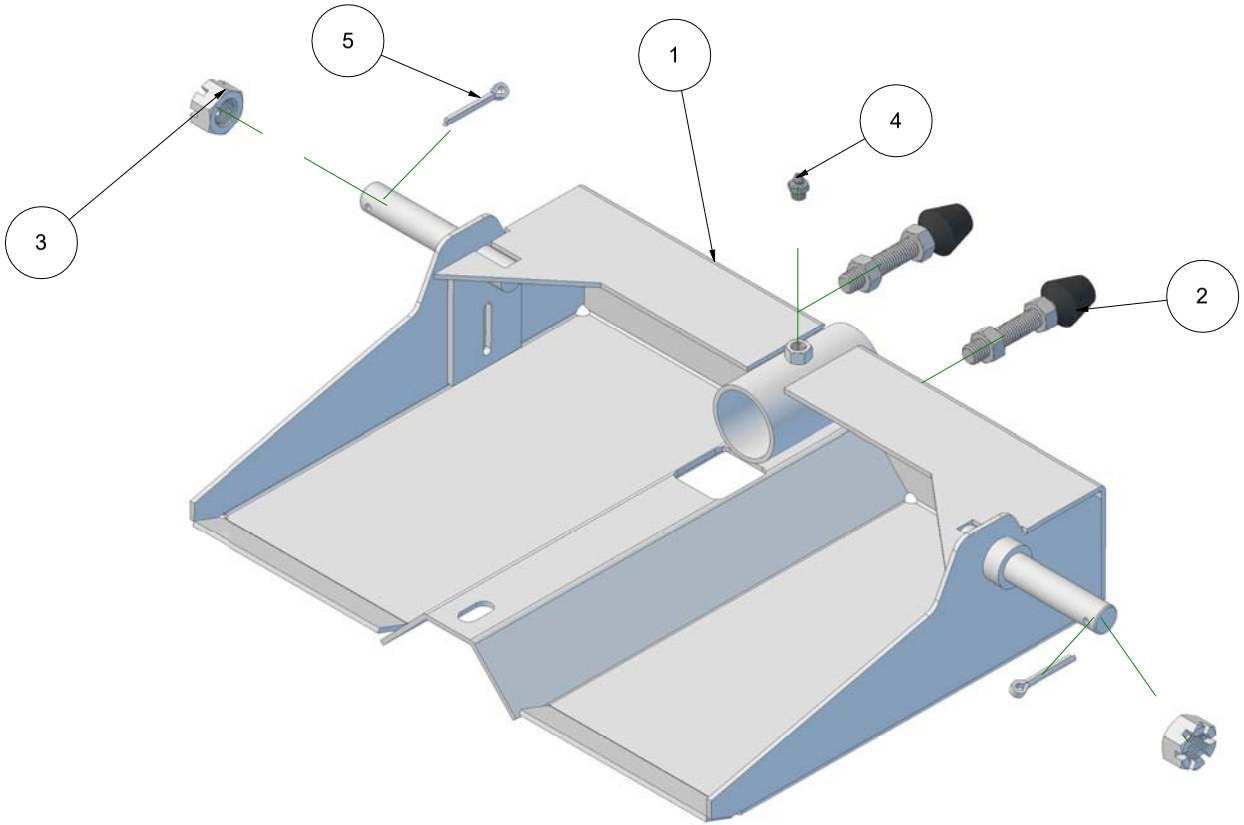

Item Number	Part Name	Part Number	Alibre Part Revision	Quantity
1	Base Weldment	WB-100	BLANK	1
2	Spindle	5147A690		2
3	Slotted Nut 3/4-16	95030A270		2
4	Grease Zerk, 3/8-24	1095K96	BLANK	1
5	Cotter Pin, 5_32_ x 1.25	98338A492		2
6	14_ Chain	3596T241-K67	BLANK	1
7	Carabiner Hook	3885T21		1
8	Bible	105264		1
9	Wheel Kaddy 360 Owners Manual	WHKMANUAL	1	1

Copyright Kage Innovation All Rights Reserved www.kageinnovation.com (844) 314-KAGE

Rear Arm 360 Assembly
100-5732

Version# 1

Version Starting Serial #

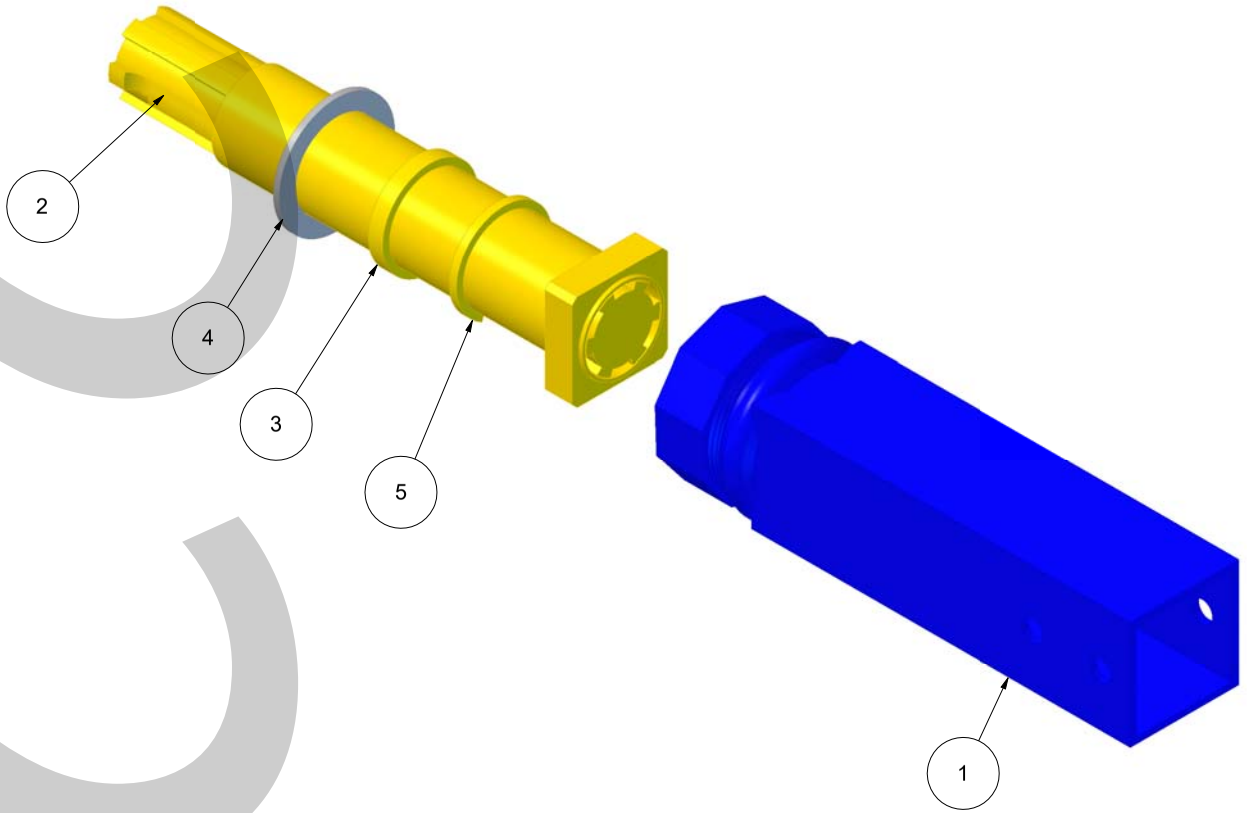

Item Number	Part Name	Part Number	Quantity
1	Rear Arm 360	100-7192	1
2	Telescoping Arm	100-4635	1
3	Backer Spacer	400-4126	1
4	Support Washer	400-7523	1
5	Split Spacer	400-8932	1

Copyright Kage Innovation All Rights Reserved www.kageinnovation.com (844) 314-KAGE

Arm Assy 360

Version# 3

Version Starting Serial #

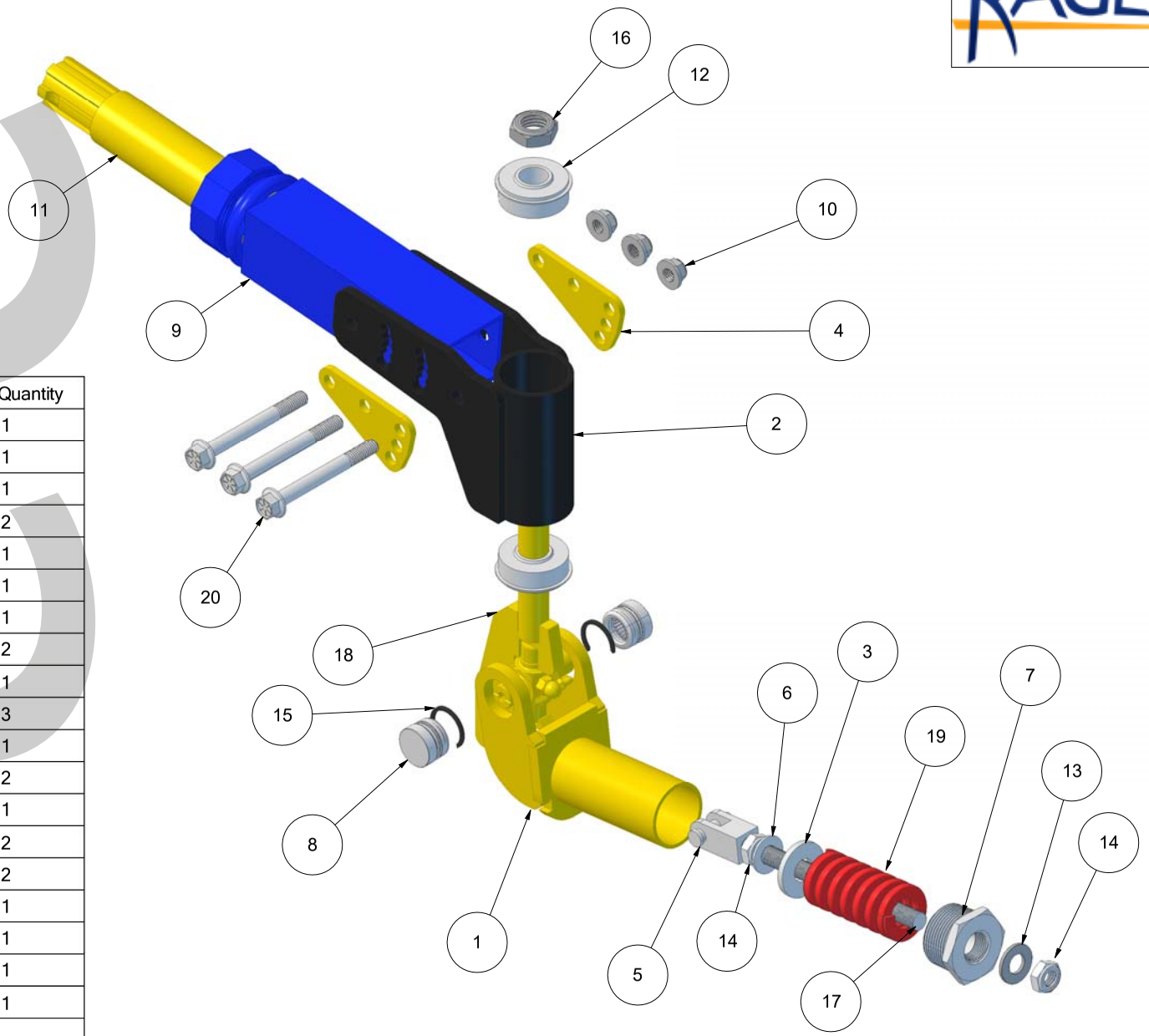

Item	Part Name	Part Number	Quantity
1	WHK 360 Spring Pivot	100-7816	1
2	360 Pivot Tube Weldment	100-7745	1
3	.75 Oversized Flat Washer	98023A121	1
4	Lock Plate	500-4745	2
5	Clevis	RC-3281	1
6	SAE Flat Washer .5 IN	94744A285	1
7	Reducer Bushing 1.25	4638K724	1
8	1200 Cross Bearing Cup	03-13914	2
9	Rear Arm 360	100-7192	1
10	Flange Locknut, 3/8 -16	93298A130	3
11	Telescoping Arm	100-4635	1
12	Flange Ball Bearing 1.75ODx.75ID	6384K369	2
13	Flat Washer 1/2	ROC-8071-033	1
14	Hex Thin Locknut 1/2-20	90566A230	2
15	Circlip	24-13817	2
16	GR5 Hex Nut Thin Nylock 3/4-10	91342A230	1
17	Threaded Rod Adjustment Long	100-7253	1
18	Lower Link Joint 360	100-2693	1
19	Spring	9588K830	1
20	Flanged Hex Bolt Gr8 3/8-16 Thread Size 3-1/2	92316A331	3

Copyright Kage Innovation All Rights Reserved www.kageinnovation.com (844) 314-KAGE

Arm 500 Assembly
ARM500

Version# ARM500

Version Starting Serial #

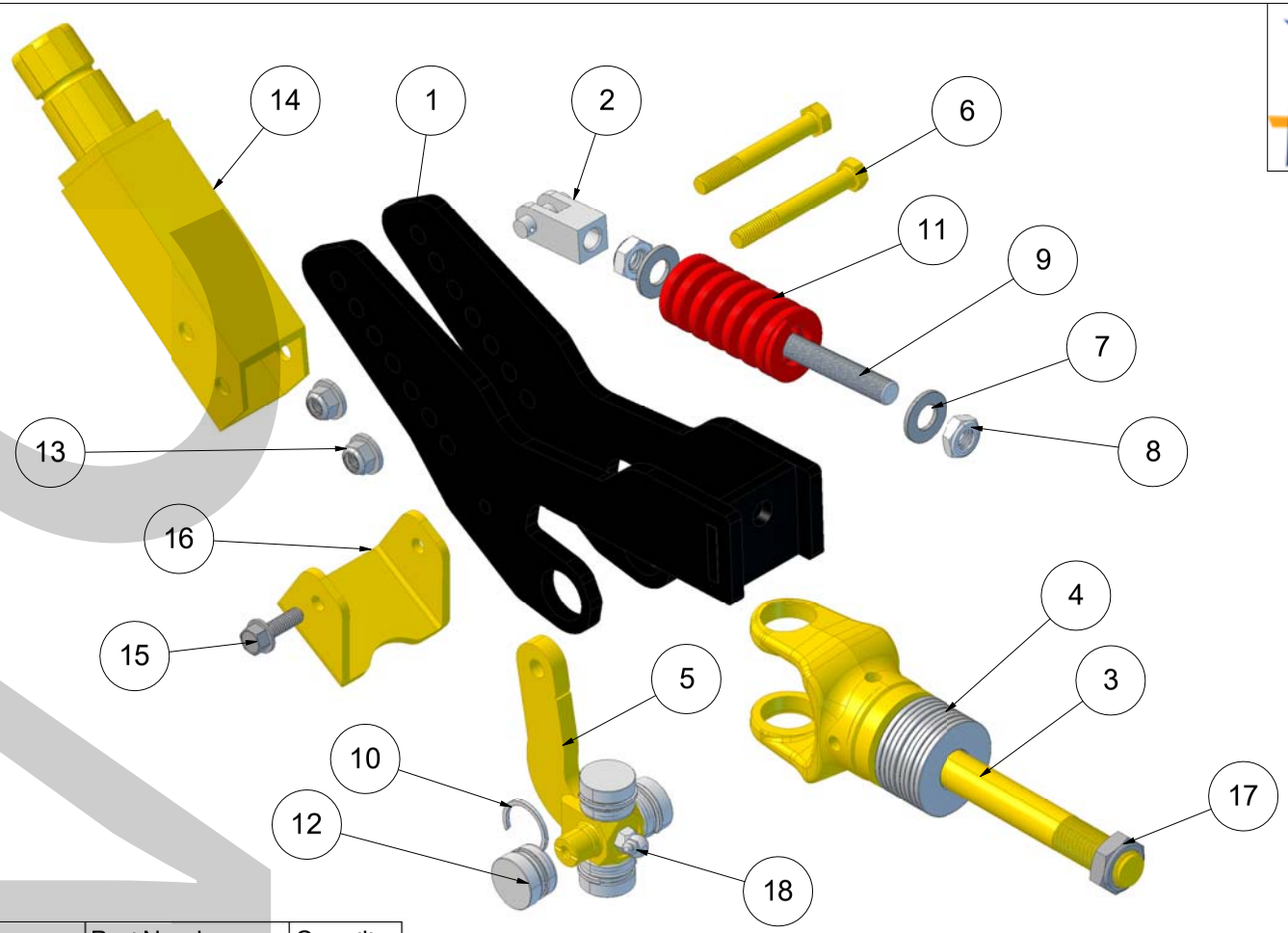

Item	Part Name	Part Number	Quantity
1	Lower Arm Link	L400	1
2	Clevis	RC-3281	1
3	Lower Pivot Link	670-335	1
4	3/4" Flat Washer	90108A036	10
5	Lower link joint	467-2004	1
6	Hex Bolt GR5 3/8-16 x 3	91257A636	2
7	Flat Washer 1/2	ROC-8071-033	2
8	Hex Thin Locknut 1/2-20	90566A230	2
9	Threaded Rod Adjustment	3400-7	1
10	Circlip	24-13817	4

Item	Part Name	Part Number	Quantity
11	Spring	9588K830	1
12	1200 Cross Bearing Cup	03-13914	4
13	Flange Locknut, 3/8 -16	93298A130	2
14	Upper Arm	1267-1	1
15	Flange Hex Bolt GR5 5/16 - 18 x 1	92979A253	2
16	Formed Bridge	500-750	1
17	GR5 Hex Nut Thin Nylock 3/4-10	91342A230	1
18	Grease Zerk 3/8-24 45	1095K23	1

Copyright Kage Innovation All Rights Reserved www.kageinnovation.com (844) 314-KAGE

Arm Eco Assy
ARM250

Version#

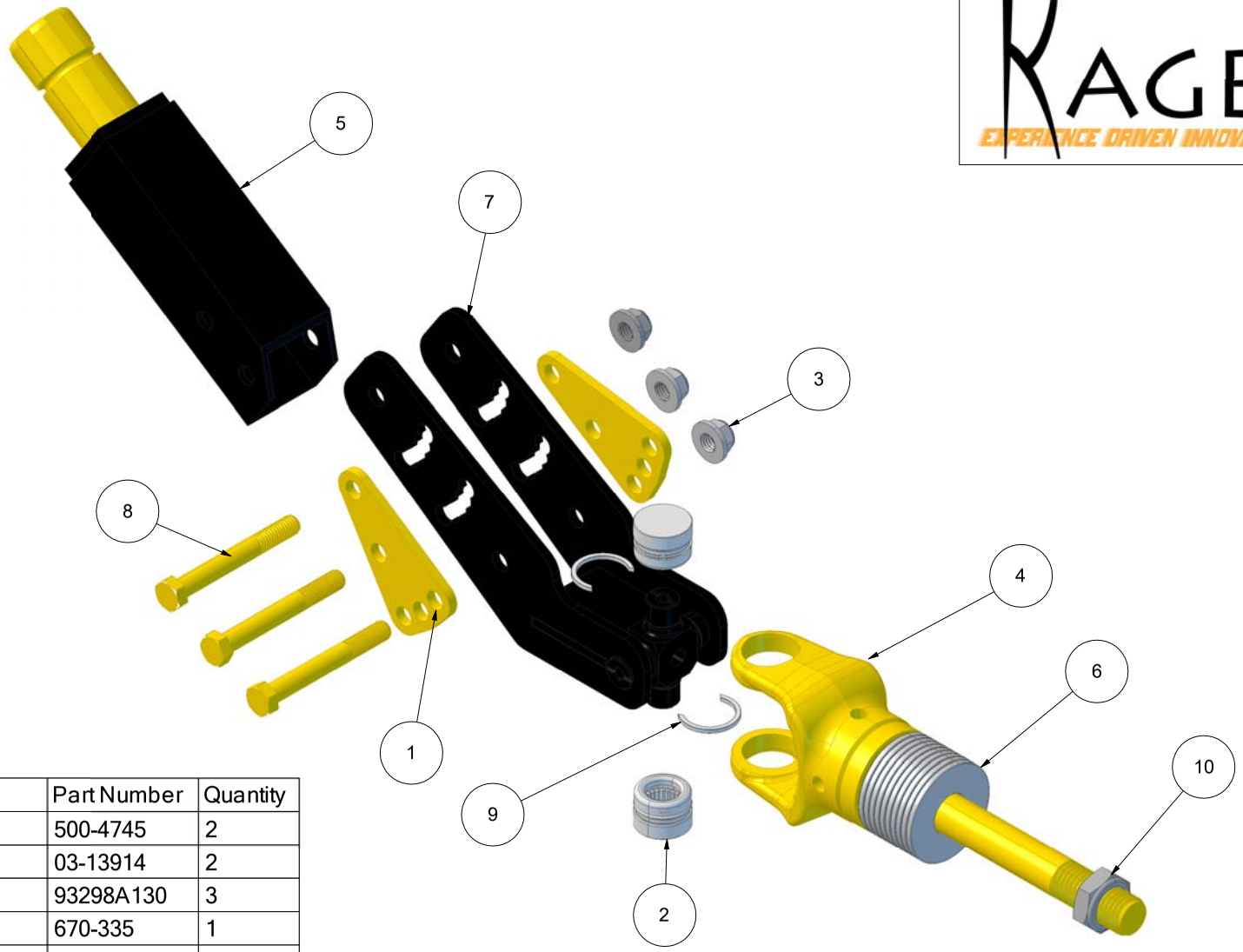

Item Number	Part Name	Part Number	Quantity
1	Lock Plate	500-4745	2
2	1200 Cross Bearing Cup	03-13914	2
3	Flange Locknut, 3/8 -16	93298A130	3
4	Lower Pivot Link	670-335	1
5	Upper Arm	1267-1	1
6	3/4" Flat Washer	90108A036	10
7	Lower Arm Weldment Eco	400-7336	1
8	Hex Bolt GR5 3/8-16 x 3	91257A636	3
9	Circlip	24-13817	2
10	GR5 Hex Nut Thin Nylock 3/4-10	91342A230	1

Copyright Kage Innovation All Rights Reserved www.kageinnovation.com 651 433 4628

13" 3 PC Tire and Rim Assembly

506DBTR34-KI

Version# 28

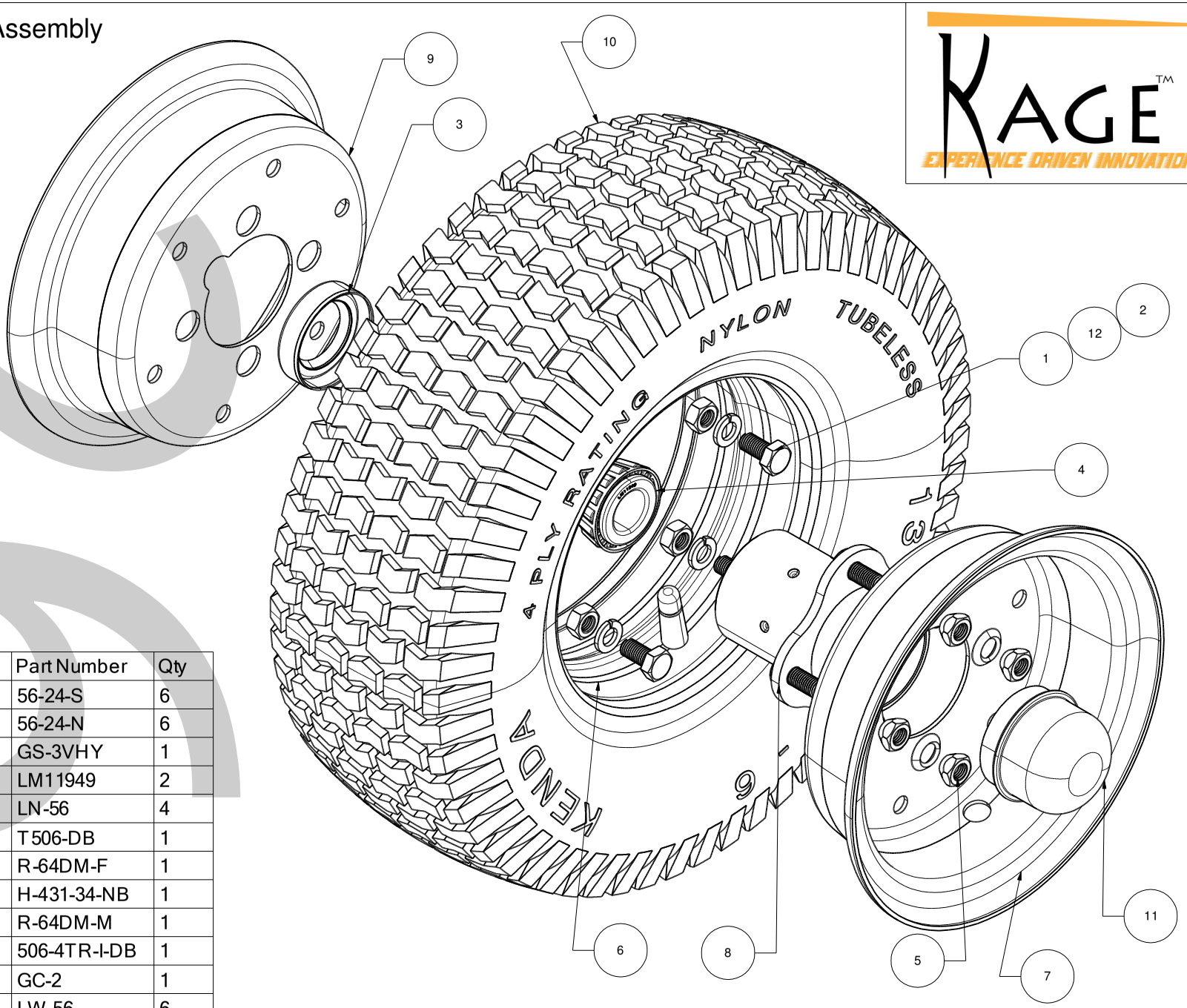

Item	Part Name	Part Number	Qty
1	Hex Bolt GR5 5/16-24	56-24-S	6
2	5/16-24 Hex Head	56-24-N	6
3	Grease Seal	GS-3VHY	1
4	Cone Bearing	LM11949	2
5	Lug Nut	LN-56	4
6	Inner Tube	T506-DB	1
7	Split Rim Female	R-64DM-F	1
8	Hub Assembly	H-431-34-NB	1
9	Split Rim Male	R-64DM-M	1
10	13" Tire 13x5.00-6	506-4TR-I-DB	1
11	Grease Cap	GC-2	1
12	5/16 Lockwasher Medium	LW-56	6

Copyright Kage Innovation All Rights Reserved www.kageinnovation.com 651 433 4628

Universal Mount
Universal

Version# 17

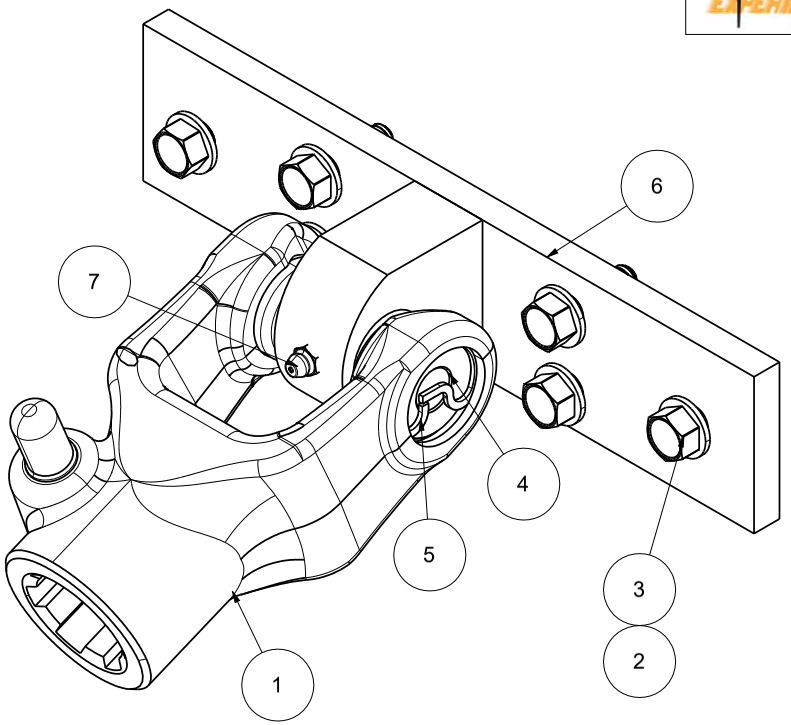

Item	Part Name	Part Number	Quantity
1	1400 Quick Release Yoke	102-1406_ASM	1
2	Flange Locknut 5/16-18	92018A320	6
3	Flange Hex Bolt GR5 5/16 - 18 x 1	92979A253	6
4	1400 Cross Bearing Cup	03-15117	2
5	1400 Retainer Clip	24-13827	2
6	Universal Mount Weldment	Universal-W	1
7	Zerk, 1/4 - 28	1095K44	1

Copyright Kage Innovation All Rights Reserved

Part Name: **Universal EX Mount**
Part Number: **EXMOUNTASSY**

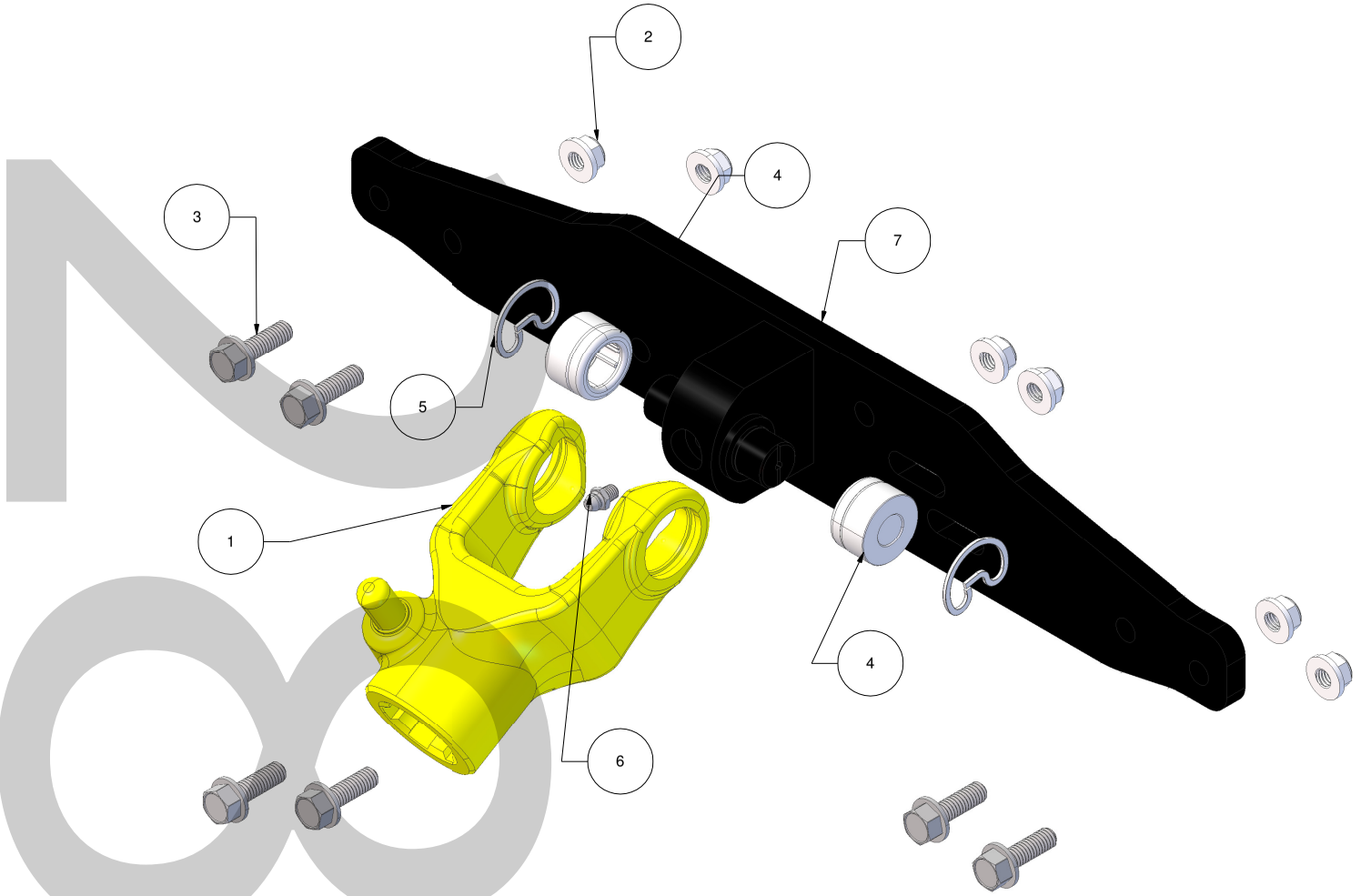

Item	Part Name	Part Number	Quantity
1	1400 Quick Release Yoke	102-1406_ASM	1
2	Flange Locknut 5/16-18	92018A320	6
3	Flange Hex Bolt GR5 5/16 - 18 x 1	92979A253	6
4	1400 Cross Bearing Cup	03-15117	2
5	1400 Retainer Clip	24-13827	2
6	Zerk, 1/4 - 28	1095K44	1
7	Universal X Mount Weldment	EXMOUNT	1

Copyright Kage Innovation All Rights Reserved

WEIGHT LBS **9.33**

Mower Model / Mount and Tire Option Recommendations

Wheel Kaddy 360

Mower Model	*Serial # Range*	*Rec. Kage Mount#*	*Rec. Tire Option*
ExMark X-Series	ALL	EXMOUNTASSY	11" (11X4.00-4 3PC RIM)
ExMark S-Series	ALL	EXMOUNTASSY	11" (11X4.00-4 3PC RIM)
FERRIS	N/A	UNIVERSAL	10" (410/350-4 3PC RIM)
SNAPPER PRO	N/A	SNAPPER	10" (410/350-4 3PC RIM)
SNAPPER PRO SW35	N/A	UNIVERSAL	10" (410/350-4 3PC RIM)
JOHN DEERE	N/A	EXMOUNTASSY	10" (410/350-4 3PC RIM)
TORO TURBO FORCE	N/A	EXMOUNTASSY	10" (410/350-4 3PC RIM)

NOTE: The UNIVERSAL mount may be easily adapted to a variety of mower models not listed here. Please refer to the "Informational / Specification Drawing Wheel Kaddy 360 Specs" for proper mounting height and tire sizing information. Generally the tire size should be 2" less than the mounting height.

Wheel Kaddy 250/500

Mower Model	*Serial # Range*	*Rec. Kage Mount#*	*Rec. Tire Option*
ExMark X-Series	ALL	EXMOUNTASSY	13" (13X5.00-6 3PC RIM)
ExMark S-Series	ALL	EXMOUNTASSY	13" (13X5.00-6 3PC RIM)
FERRIS	N/A	UNIVERSAL	13" (13X5.00-6 3PC RIM)
SNAPPER PRO	N/A	SNAPPER	13" (13X5.00-6 3PC RIM)
SNAPPER PRO SW35	N/A	UNIVERSAL	13" (13X5.00-6 3PC RIM)
JOHN DEERE	N/A	UNIVERSAL	13" (13X5.00-6 3PC RIM)
TORO TURBO FORCE	N/A	UNIVERSAL	13" (13X5.00-6 3PC RIM)

NOTE: The UNIVERSAL mount may be easily adapted to a variety of mower models not listed here. Please refer to the "Informational / Specification Drawing Wheel Kaddy 250 Specs" for proper mounting height. Since the 250 series does not turn underneath the mount, the tire size does not contribute to the decision. The tire sizes for the 250 series are merely a matter of preference and cost. The 3 piece wheels with tapered roller bearings are available as an upgrade.

Kage Innovation LLC | 5302 Stagecoach Trail | Oak Park Heights 55082
Tel. (844) 314-KAGE | Fax (651) 344-0887 | www.kageinnovation.com | info@kageinnovation.com

Mount Options

Version#
Version Starting Serial #

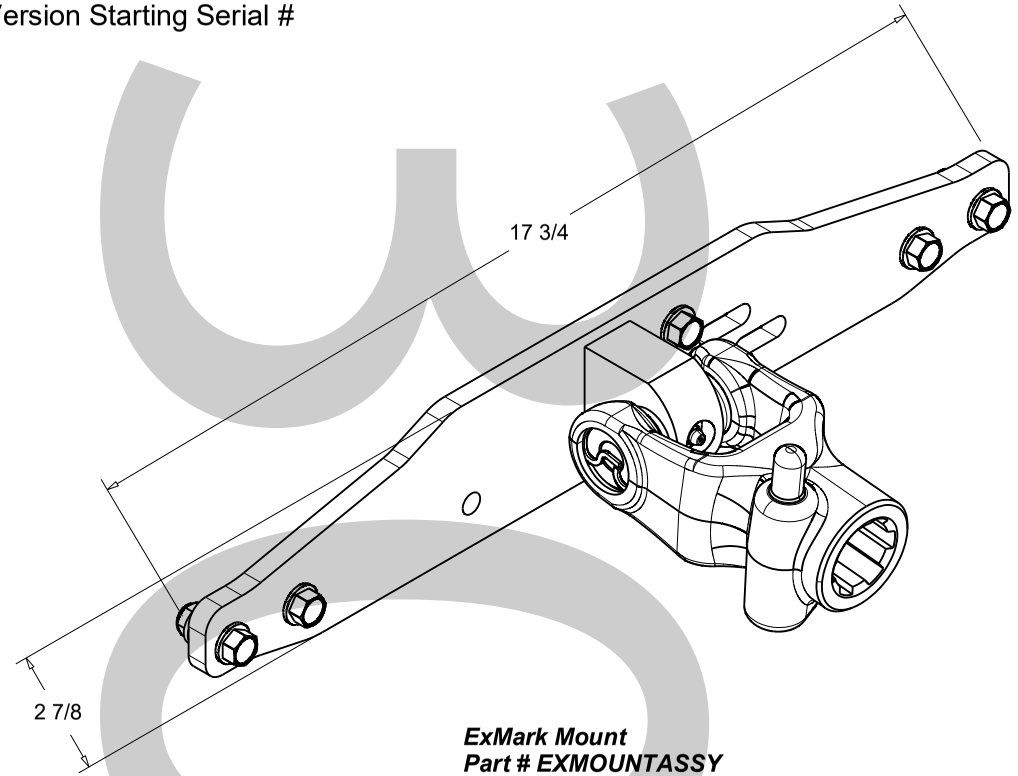

ExMark Mount
Part # EXMOUNTASSY
For S-Series (HP) and X-Series Exmark®

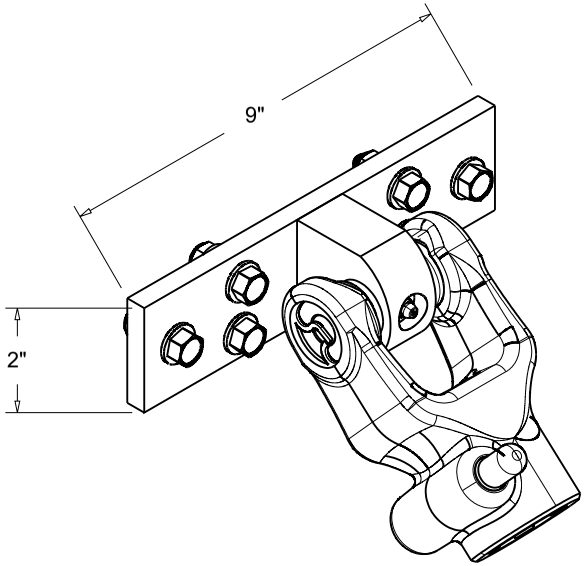

Universal Series Mount
Part # Universal
For any Brand / Model of walk-behind
Requires holes to be drilled

Previous mount styles have a smaller yoke with circlips on the inside. Order with care.

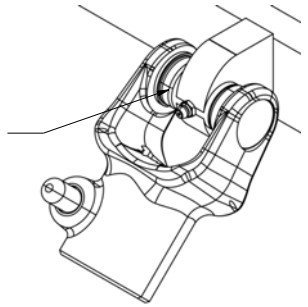

Copyright Kage Innovation All Rights Reserved www.kageinnovation.com (844) 314-KAGE

Wheel Kaddy 360
WHK-360
Specification Sheet

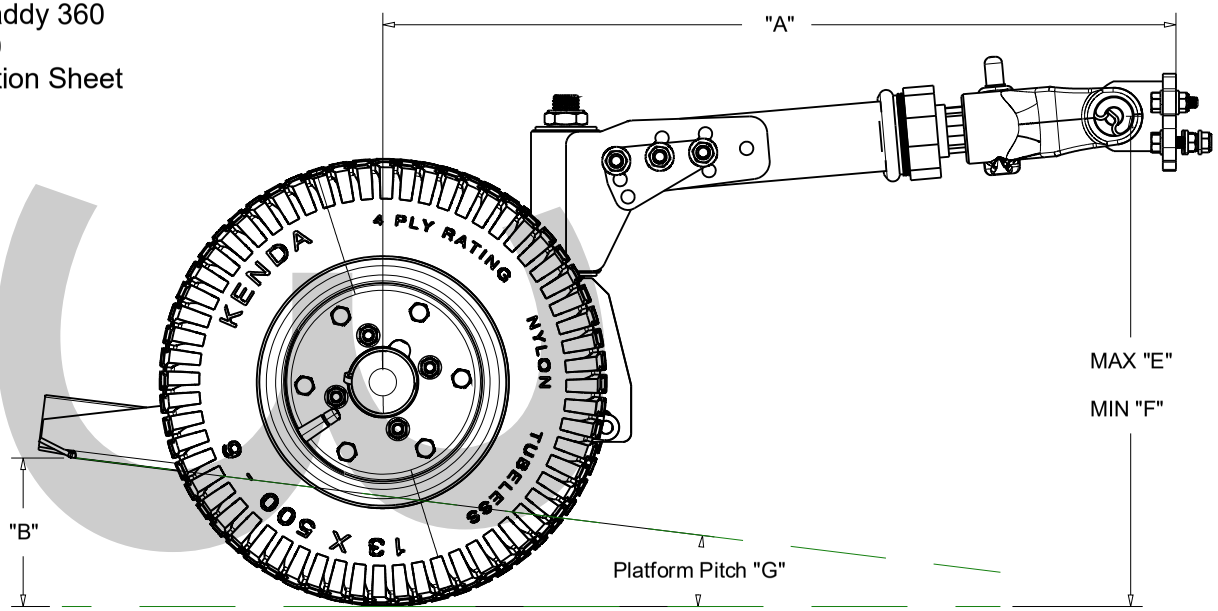

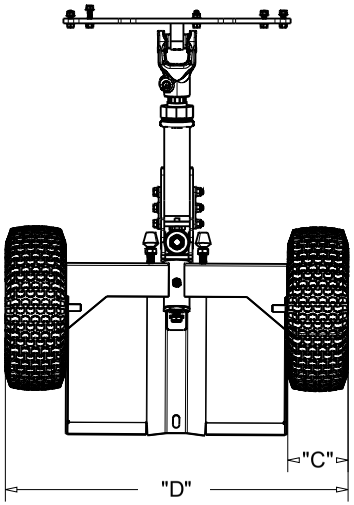

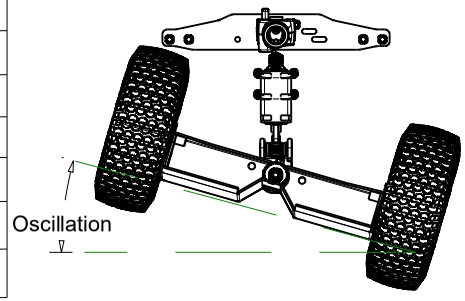

Tire Size Option	13" Tires (13x5.00-6)	11" Tires (11x4.00-4)	10" Tires (410/350-4)
DIM "A" (Length Adj.)	Adjustable 21" - 25"	Adjustable 21" - 25"	Adjustable 21" - 25"
DIM "B" In. (Platform Height)	3"	2 1/8"	1 3/4"
DIM "C" (Tire Width)	4 1/2"	3 7/8"	3 7/8"
DIM "D" (OA Platform Width)	26 3/4"	26 1/4"	26 1/4"
DIM "E" (Max Mount Height)	15"	14 1/2"	13 1/2"
DIM "F" (Min Mount Height)	14 1/2" *	13"	12"
DIM "G" (Pitch Adj.)	Adjustable +/- 3 Deg. from Level	Adjustable +/- 3 Deg. from Level	Adjustable +/- 3 Deg. from Level
Weight Lbs.	54.6	48.8	46.8
Bearing Type	Tapered Roller Bearing	Tapered Roller Bearing	Tapered Roller Bearing
Oscillation	Yes	Yes	Yes
Tubed	Yes	Yes	Yes
360 Degree Pivot	Yes	Yes	Yes
Suspension	Yes	Yes	Yes

Copyright Kage Innovation All Rights Reserved www.kageinnovation.com (844) 314-KAGE

Wheel Kaddy 500
WHK-500
Specification Sheet

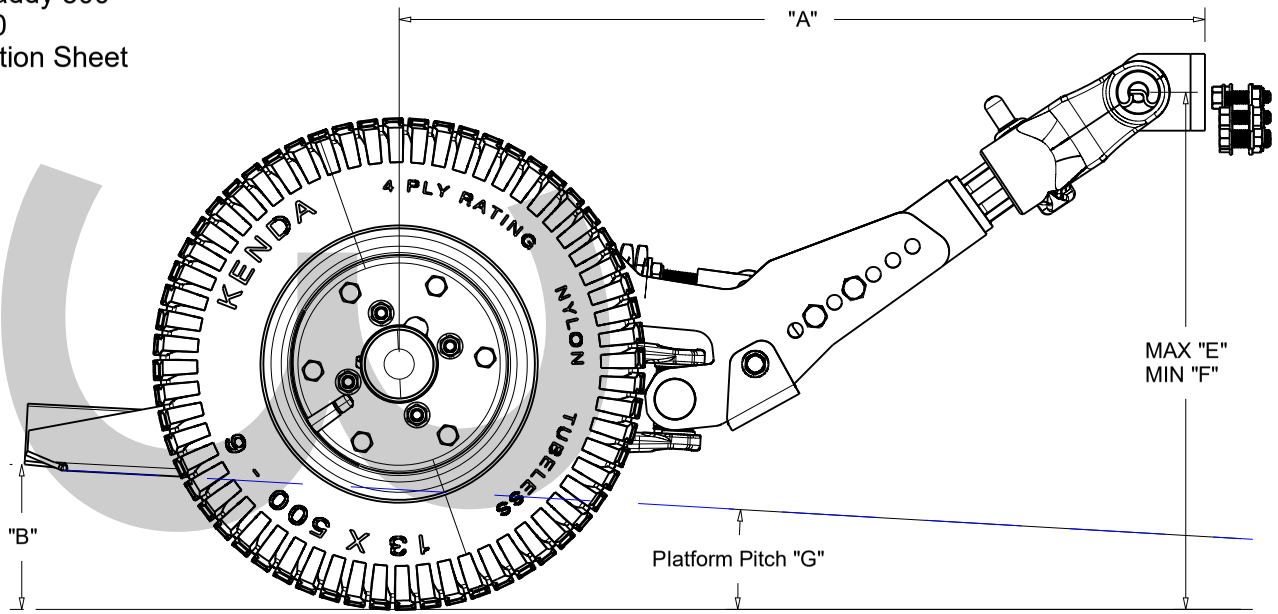

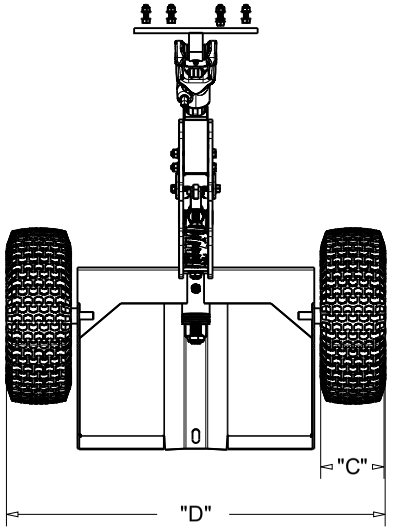

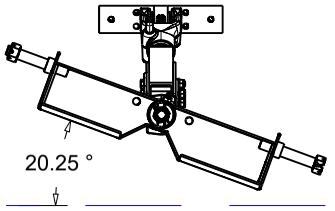

Tire Size Option	13" Tires (13x5.00-6)	11" Tires (11x4.00-4)	10" Tires (410/350-4)
DIM "A" (Length Adj.)	Adjustable 20" - 26"	Adjustable 20" - 26"	Adjustable 20" - 26"
DIM "B" In. (Platform Height)	3"	2 1/8"	1 3/4"
DIM "C" (Tire Width)	4 1/2"	3 7/8"	3 7/8"
DIM "D" (OA Platform Width)	26 3/4"	26 1/4"	26 1/4"
DIM "E" (Max Mount Height)	15 3/8"	15 3/8"	15 3/8"
DIM "F" (Min Mount Height)	9 3/8"	9 3/8"	9 3/8"
DIM "G" (Pitch Adj.)	N/A	N/A	N/A
Weight Lbs.	48	44	41
Bearing Type	Tapered Roller Bearing	Tapered Roller Bearing	Tapered Roller Bearing
Oscillation	Yes	Yes	Yes
Tubed	Yes	Yes	Yes
360 Degree Pivot	N/A	N/A	N/A
Suspension	Yes	Yes	Yes

Copyright Kage Innovation All Rights Reserved www.kageinnovation.com (844) 314-KAGE

Wheel Kaddy 250
WHK-250
Specification Sheet

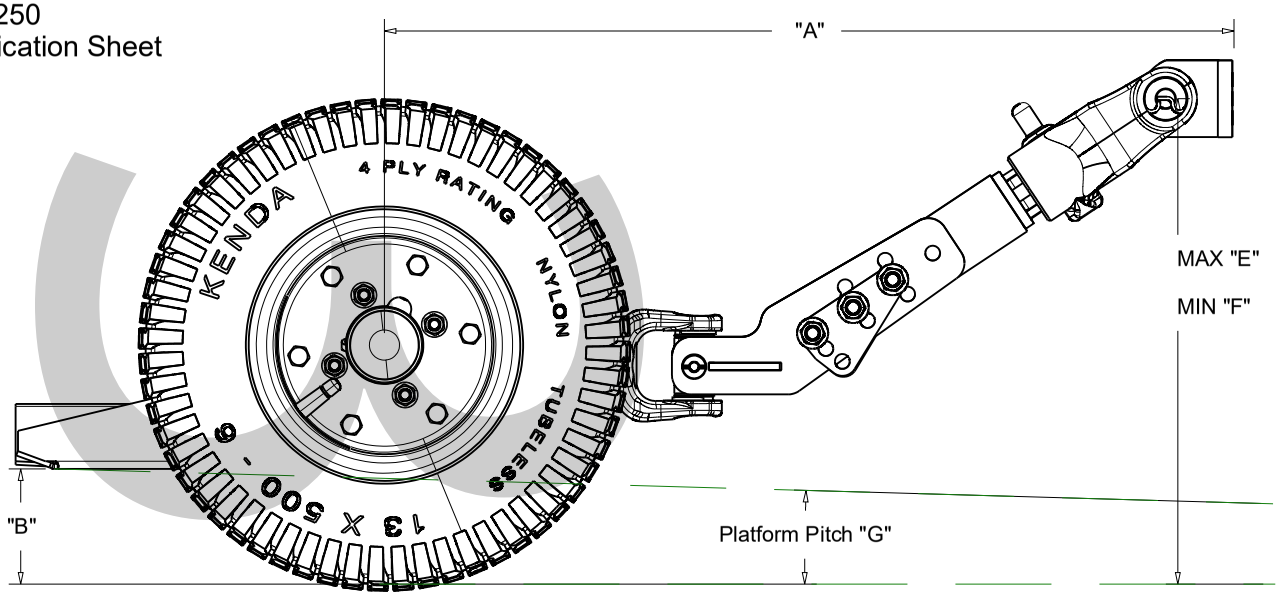

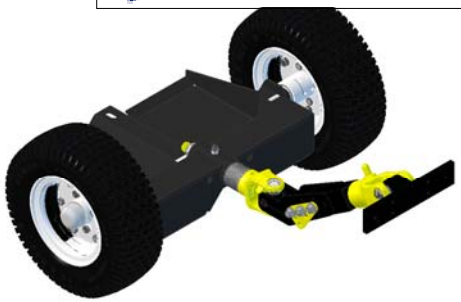

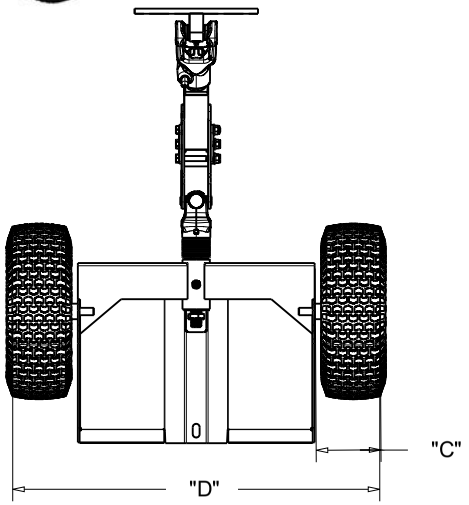

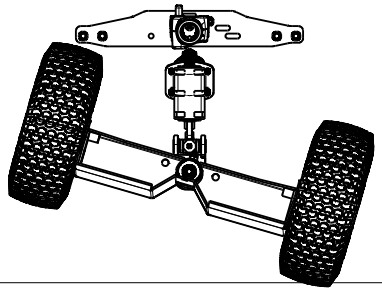

Tire Size Option	13" Tires (13x5.00-6)	11" Tires (11x4.00-4)	10" Tires (410/350-4)
DIM "A" (Length Adj.)	Adjustable 20" - 26"	Adjustable 20" - 26"	Adjustable 20" - 26"
DIM "B" In. (Platform Height)	3"	2 1/8"	1 3/4"
DIM "C" (Tire Width)	4 1/2"	3 7/8"	3 7/8"
DIM "D" (OA Platform Width)	26 3/4"	26 1/4"	26 1/4"
DIM "E" (Max Mount Height)	15 3/8"	15 3/8"	15 3/8"
DIM "F" (Min Mount Height)	9 3/8"	9 3/8"	9 3/8"
DIM "G" (Pitch Adj.)	N/A	N/A	N/A
Weight Lbs.	48	44	41
Bearing Type	Tapered Roller Bearing	Tapered Roller Bearing	Tapered Roller Bearing
Oscillation	Yes	Yes	Yes
Tubed	Yes	Yes	Yes
360 Degree Pivot	N/A	N/A	N/A
Suspension	N/A	N/A	N/A

Copyright Kage Innovation All Rights Reserved www.kageinnovation.com (844) 314-KAGE

Kage Limited Warranty

Kage Innovation will repair or, at the option of Kage Innovation, replace those parts which prove defective due to material or workmanship under normal use for a period of two (2) years from the date of retail sale or date of invoice from Kage Innovation, whichever is later. Expendable items, such as rubber, or polyurethane are excluded from this warranty.

Kage Innovation warrants that the products manufactured by us to be in accordance with our published specifications or those specifications agreed to by us in writing at the time of sale. The obligation of Kage Innovation is expressly limited to repairing or replacing, at its option, any product not meeting such specifications within the warranty period.

LIMITATIONS OF WARRANTY AND DAMAGES

KAGE INNOVATION MAKES NO OTHER WARRANTY, EXPRESSED OR IMPLIED, AND MAKES NO WARRANTY OF MERCHANTABILITY OR OF FITNESS FOR ANY PARTICULAR PURPOSE. THERE ARE NO WARRANTIES WHICH EXTEND BEYOND THE FACE HEREOF.

IN NO EVENT SHALL KAGE INNOVATION, BE HELD LIABLE FOR SPECIAL, INCIDENTAL OR CONSEQUENTIAL DAMAGES OR FOR DAMAGES RESULTING FROM MISAPPLICATION, ABUSE, MISUSE, ACTS OF GOD, UNAUTHORIZED ALTERATION OF THE KAGE INNOVATION PRODUCT, OR SUBSTITUTION OF PARTS NOT AUTHORIZED IN WRITING BY KAGE INNOVATION.

To obtain service under this warranty the consumer must return the defective Kage Innovation product to Kage Innovation directly, the dealer from which the product was purchased or to any authorized Kage Innovation dealer, transportation and freight charges prepaid. Only Kage Innovation dealers are authorized to perform the obligations under this warranty with pre-authorization from Kage Innovation.

No person is authorized to alter or amend this warranty or to create any warranty other than that set forth herein without the expressed written consent of Kage Innovation.

Kage Innovation reserves the right to make improvement changes on any of our products without prior notice.