SnowFire Blast™

Owners Manual

REV:2023.10.29

Scan for online access to replacement parts

KAGE® Innovation LLC 502 Simmon Drive Osceola, WI 54020 | (844) 314 - Kage | www.kageinnovation.com

INTRODUCTION

Congratulations on your new SnowFire Blast™ Pusher! Be sure to save this for future parts lookup, and note the other maintenance instructions contained in this owners' manual!

The entire Team at KAGE Innovation is thankful to you for your purchase, and support of our brand! Make sure to let us know how we are doing, and if there is anything that we can do better! We love to serve the snow removal and landscape professionals!

MAINTENANCE

1. There are two grease points located on the slot plate. Grease these 2 x per season. See diagram A.
2. Check and replace your cutting edges on the moldboard as needed. Depending on the plowing surface, speed, and use, this will happen 1—4 times per season. The OEM cutting edges are 6" Tall x 5/8" thick high carbon steel. They use a "standard highway punch" bolt pattern.
3. Check and replace your skids P/N 6912587. Typically these will be replaced as often as the cutting edge(s). See diagram B for easy replacement.

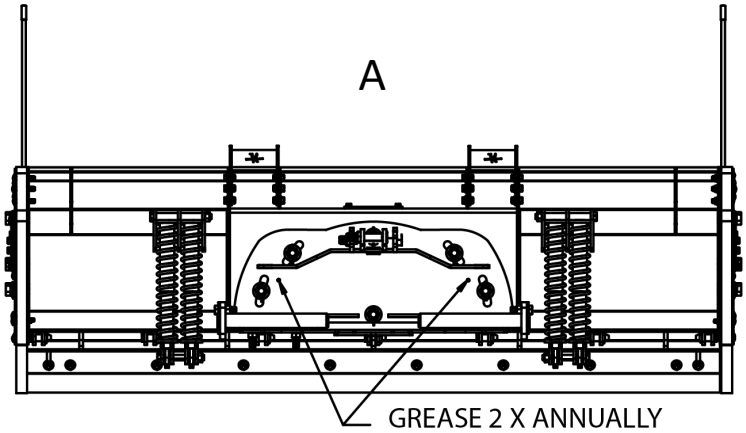

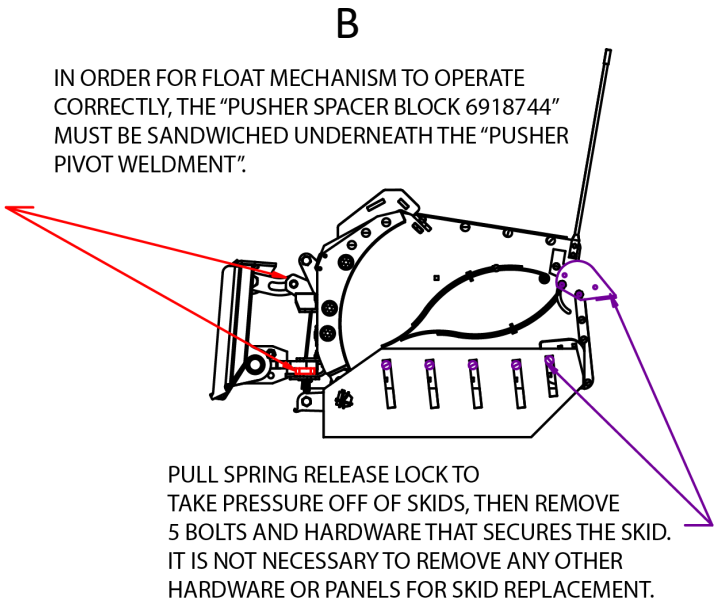

INITIAL SETUP STIFFENER ARM CONFIGURATIONS

6' Arm Stiffener Use—Single

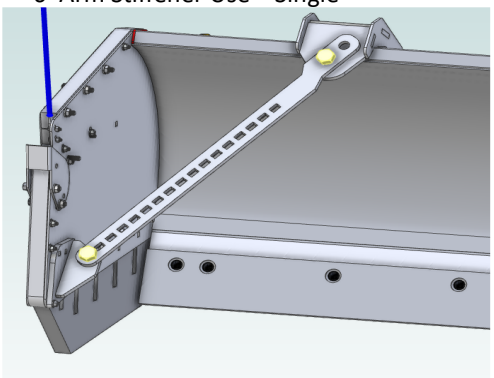

8-12' Example Arm Stiffener Use—Double

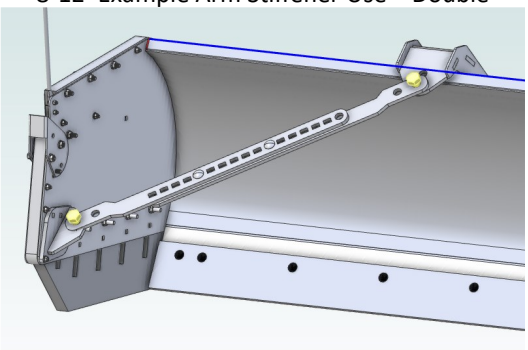

Parts Breakdown for 6, 8, 9, and 10' Models

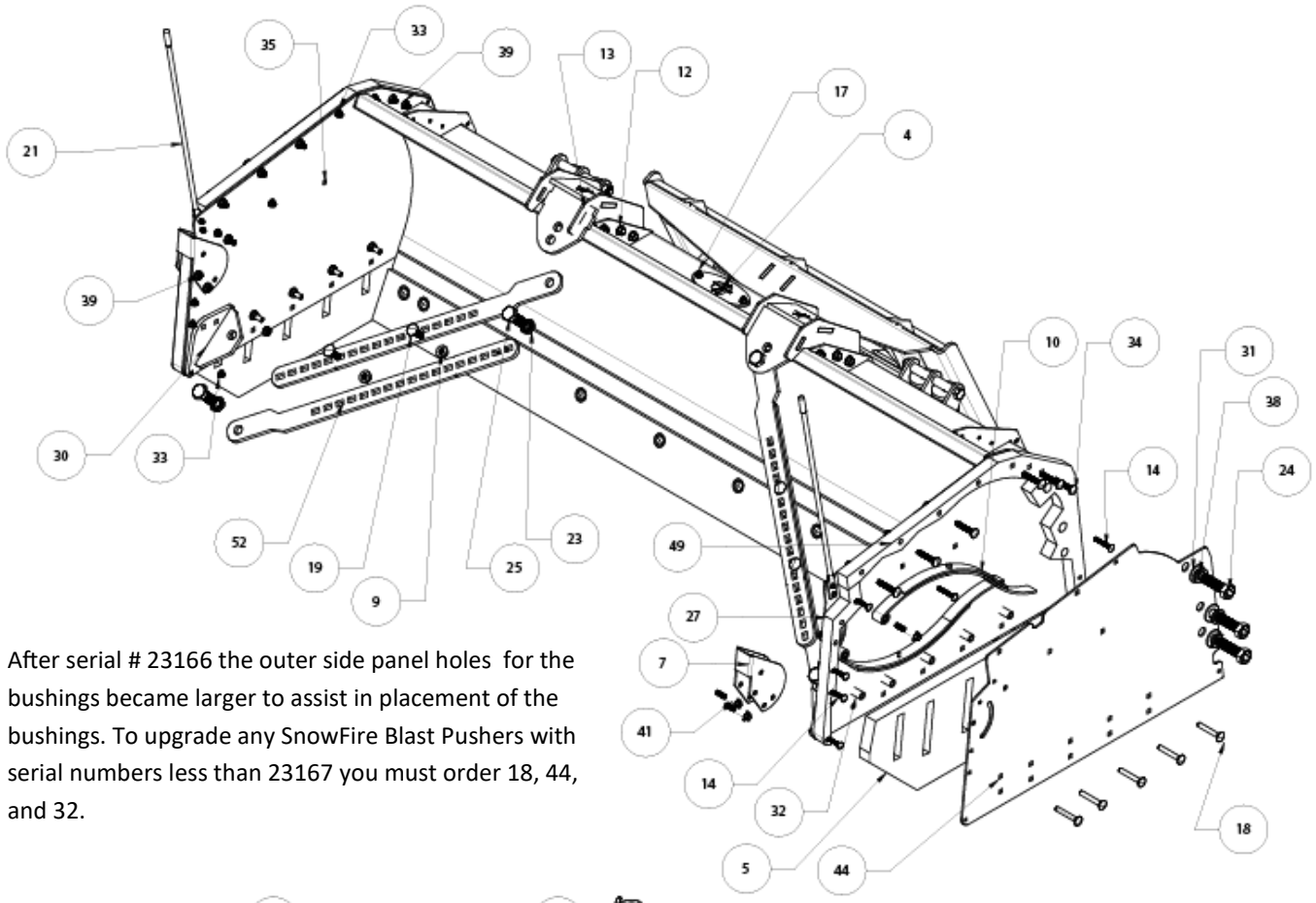

After serial # 23166 the outer side panel holes for the bushings became larger to assist in placement of the bushings. To upgrade any SnowFire Blast Pushers with serial numbers less than 23167 you must order 18, 44, and 32.

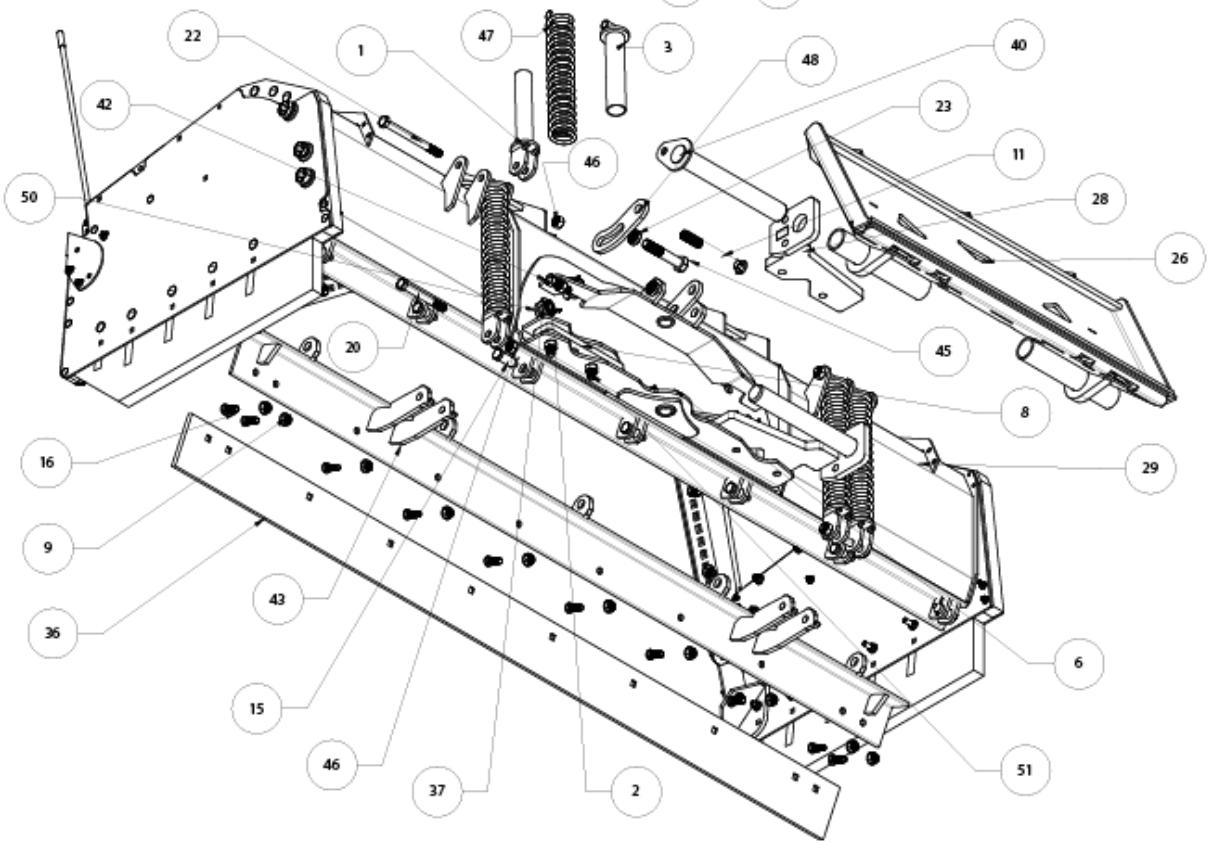

Parts Breakdown for 6, 8, 9, and 10' Models

Item	Part Name	Part Number	QTY
1	Spring Bottom L	SP800	4
2	Cotter Pin 3/16 x 2	98338A516	13
3	Spring Top L	SP900	4
4	Hole Cap	404-1	1
5	Pusher Skid	6912587	2
6	SLOT PLATE	153	1
7	Leaf Spring Lock	6914889	2
8	Pusher Spacer Block	6918744	2
9	Flange Locknut 5/8-11	3221357	14
10	Leaf Spring	123456789121	4
11	Hex Bolt GR8 1-8 x 8	91257A977	1
12	Flange Hex Bolt 1/2 - 13 x 1	92979A463	12
13	Pusher Brace Bracket	6914899	2
14	Carriage Bolt 3_8-16 x 2.5	90185A634	15
15	Clevis Pin	98306A677	7
16	Plow Bolt 5/8-11 x 2"	90934A802	10
17	Flange Hex Bolt 3/8 - 16 - 1.25	92979A348	2
18	Carriage Bolt GR5 1/2-13 x 3 (superceded)	ROC-2131-724	10
18 REV 2	Flange Hex Bolt GR5 1/2 - 13 x 3	90409A155	10
19	Carriage Bolt 5/8-11 x 2	90185A810	4
20	Hex Bolt GR5 3/4-10 x 6	91247A859	2
21	Plow Guide	W-1578	2
22	Hex Bolt GR5 3/4-10 x 8	91247A863	2
23	1-8 Thin Hex Nylock Nut Gr5	91342A260	6
24	Hex Bolt Gr8 1-8 x 3.25	92620A959	6
25	HEX BOLT GR8 1-8 x 2.25	92620A954	4
26	Floating Skidsteer Attachment Plate	28-600	1
27	Pusher Frame Front	6902365	2
28	Pusher Pivot Weldment	6914993	2

Item	Part Name	Part Number	QTY
29	MOLDBOARD WELDMENT 8	SBM-8	1
30	Universal Brace Weldment	691895	2
31	SAE Flat Washer 1 x 2	90126A038	6
32	Skid Bushing (superceded)	B-812515	10
32 REV 2	Skid Bushing	B-812516 REV2	11
33	Flange Locknut, 3_8 -16	93298A130	15
34	Carriage bolt 1/2 - 13 x 2.5	90185A722	12
35	Snow Pusher Side Panel Inner	6919888	2
36	Cutting edge 6ft, 8ft, or 9ft	SBC72, SBC96, SBC108	1
136	Cutting edge 10ft	SBC60	2
37	Slotted Nut 1-8	97190A040-K8	6
38	Lockwasher 1"	91102A038	6
39	Flange Locknut 1/2 - 13	RF1213OFZ	36
40	Float Pin	67-001	2
41	Hex Flange Bolt 1_2-13 x 3 IN	90409A155	6
42	Hex Bolt Gr5 3/4-10 x 2.5	92865A845	2
43	Base Angle SF 6, 8, 9, 10	214-6, 214-8, 214-9, 214-10	1
44	Snow Pusher Side Frame Panel Outer (superceded)	6913332	2
44 REV 2	Snow Pusher Side Frame Panel Outer	6913332 REV2	2
45	Hex Bolt GR8 1-8 x 5	91257A965	1
46	CenterLocknut GR2 3/4-10	90040A147-K5	8
47	Spring 17	SP21	4
48	Slide Arc	3908555	2
49	Pusher Frame back	9612875	2
50	1-.375 washer	13W	6
51	Hex Bolt GR8 3/4-10 x 4"	91257A851	2
52	Stiff Arm Plate for SDP72	6912563	2
52	Stiff Arm Plate for SDP96—SDP144	9612563	4

Parts Breakdown for 12' Models

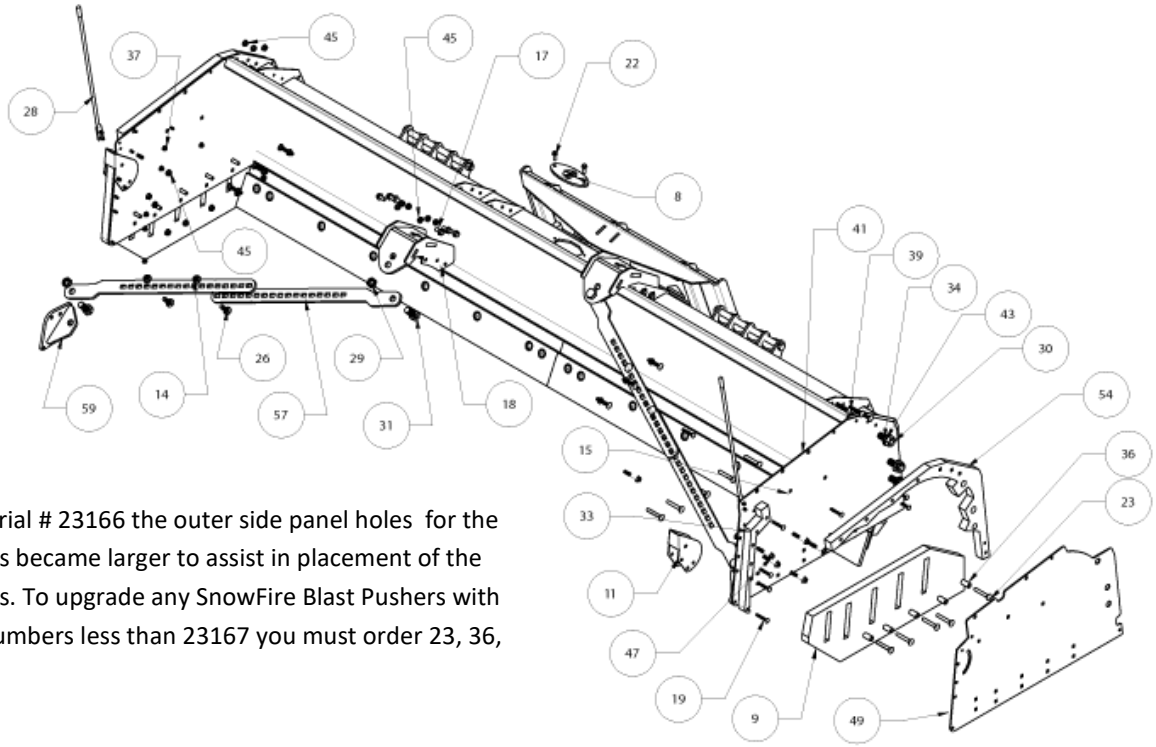

After serial # 23166 the outer side panel holes for the bushings became larger to assist in placement of the bushings. To upgrade any SnowFire Blast Pushers with serial numbers less than 23167 you must order 23, 36, and 49.

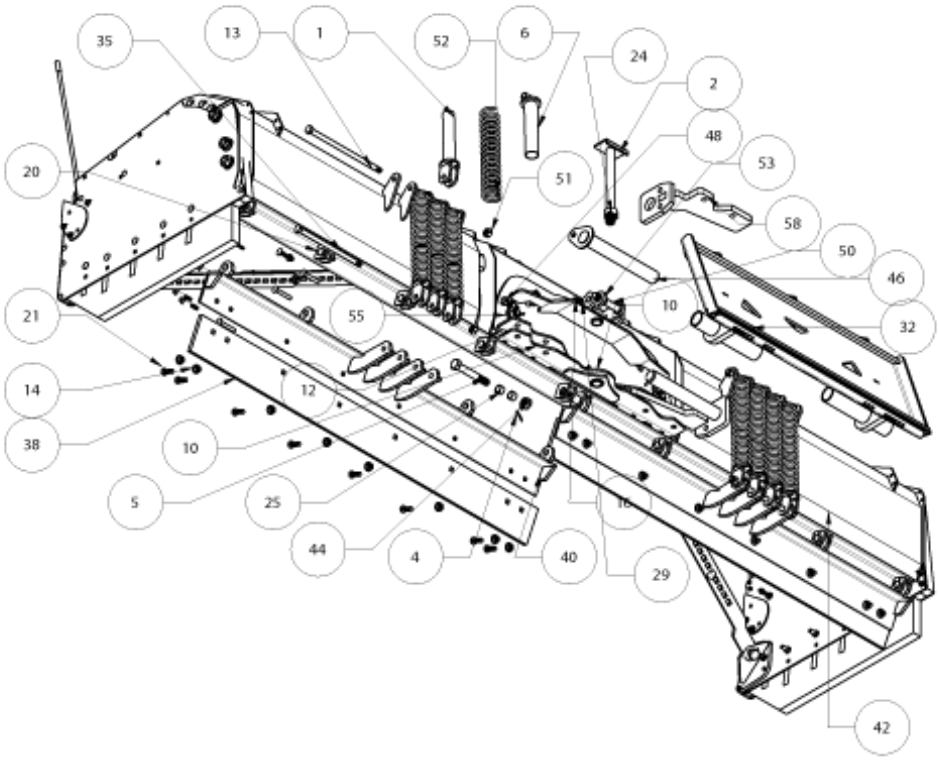

Parts Breakdown for 12' Models

Item	Part Name	Part Number	QTY
1	Spring Bottom L	SP800	8
2	KING PIN	189-1	1
4	Cotter Pin 3/16 x 2	98338A516	15
5	Hex Bolt GR8 1-8 x 6.5 w Hole	91257A970-K5	1
6	Spring Top L	SP900	8
8	Hole Cap	404-1	1
9	Pusher Skid	6912587	2
10	SLOT PLATE	153	1
11	Leaf Spring Lock	6914889	2
12	Pusher Spacer Block	6918744	3
13	Hex Bolt Grade2 .75-10 x 15	H2Z_075_1500_10	2
14	Flange Locknut 5/8-11	3221357	20
15	Leaf Spring	123456789121	3
16	Hex Bolt GR8 1-8 x 8	91257A977	1
17	Flange Hex Bolt 1/2 - 13 x 1	92979A463	12
18	Pusher Brace Bracket	6914899	2
19	Carriage Bolt 3_8-16 x 2.5	90185A634	16
20	Clevis Pin	98306A677	8
21	Plow Bolt 5/8-11 x 2"	90934A802	16
22	Flange Hex Bolt 3/8 - 16 - 1.25	92979A348	2
23	Carriage Bolt GR5 1/2-13 x 3 (superceded)	ROC-2131-724	10
23 REV 2	Flange Hex Bolt GR5 1/2 - 13 x 3	90409A155	10
24	Hex Locknut 1.25-7	93470A540	1
25	Stop Bushing	909-4	2
26	Carriage Bolt 5/8-11 x 2	90185A810	4
28	Plow Guide	W-1578	2
29	1-8 Thin Hex Nylock Nut Gr5	91342A260	6
30	Hex Bolt Gr8 1-8 x 3.25	92620A959	6

Item	Part Name	Part Number	QTY
31	HEX BOLT GR8 1-8 x 2.25	92620A954	4
32	Floating Skidsteer Attachment Plate	28-600	1
33	Pusher Frame Front	6902365	2
34	SAE Flat Washer 1 x 2	90126A038	6
35	Hex Bolt Grade2 .75-10 x 13	H2Z_075_1300_10	2
36	Skid Bushing (superceded)	B-812515	10
36 REV 2	Skid Bushing	B-812515 REV2	10
37	Flange Locknut, 3_8 -16	93298A130	15
38	Cutting Edge 6ft	SBC72	2
39	Carriage bolt 1/2 - 13 x 2.5	90185A722	12
40	12 SF Base Angle 6	214-12	2
41	Snow Pusher Side Panel Inner	6919888	2
42	MOLDBOARD WELDMENT 12	SBM-12	1
43	Lockwasher 1"	91102A038	6
44	Slotted Nut 1-8	97190A040-K8	7
45	Flange Locknut 1/2 - 13	RF1213OFZ	40
46	Float Pin	67-001	2
47	Hex Flange Bolt 1_2-13 x 3 IN	90409A155	9
48	Hex Bolt Gr5 3/4-10 x 2.5	92865A845	2
49	Snow Pusher Side Frame Panel Outer (superceded)	6913332	2
49 REV 2	Snow Pusher Side Frame Panel Outer	6913332 REV2	2
50	Hex Bolt GR8 1-8 x 5	91257A965	1
51	CenterLocknut GR2 3/4-10	90040A147-K5	6
52	Spring 17	SP21	8
53	Slide Arc	3908555	2
54	Pusher Frame back	9612875	2
55	1-.375 washer	13W	6
57	Stiff Arm Plate	6912563	4
58	Pusher Pivot Weldment	6914993	2
59	Universal Brace Weldment	691895	2

Backdrag kit for 6, 8, 9, 10 and 12' Models

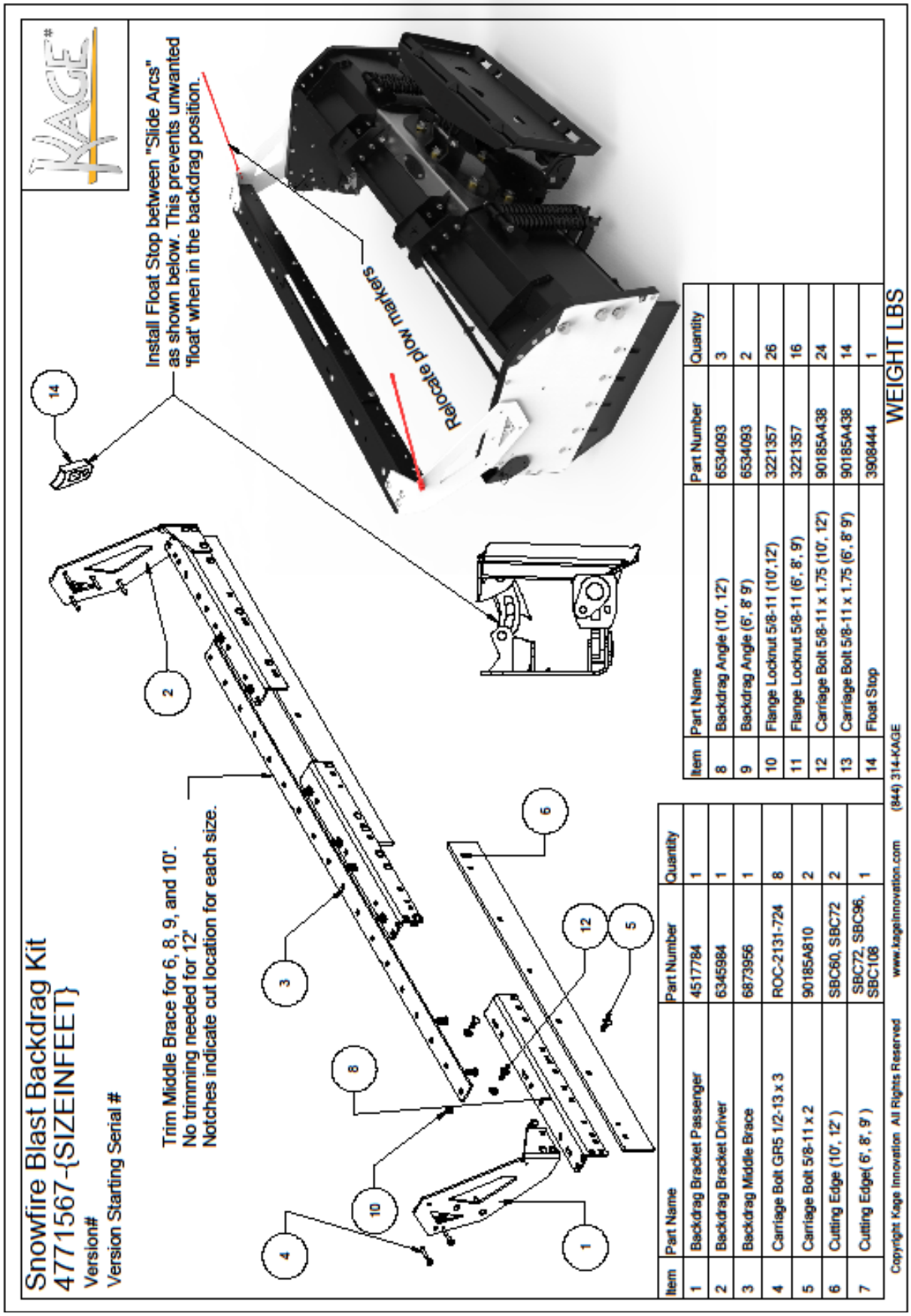

Kage Limited Warranty

Kage Innovation will repair or, at the option of Kage Innovation, replace those parts which prove defective due to material or workmanship under normal use for a period of two (2) years from the date of retail sale or date of invoice from Kage Innovation, whichever is later. Expendable items, such as rubber, or polyurethane are excluded from this warranty.

Kage Innovation warrants that the products manufactured by us to be in accordance with our published specifications or those specifications agreed to by us in writing at the time of sale. The obligation of Kage Innovation is expressly limited to repairing or replacing, at its option, any product not meeting such specifications within the warranty period.

LIMITATIONS OF WARRANTY AND DAMAGES

KAGE INNOVATION MAKES NO OTHER WARRANTY, EXPRESSED OR IMPLIED, AND MAKES NO WARRANTY OF MERCHANTABILITY OR OF FITNESS FOR ANY PARTICULAR PURPOSE. THERE ARE NO WARRANTIES WHICH EXTEND BEYOND THE FACE HEREOF.

IN NO EVENT SHALL KAGE INNOVATION, BE HELD LIABLE FOR SPECIAL, INCIDENTAL OR CONSEQUENTIAL DAMAGES OR FOR DAMAGES RESULTING FROM MISAPPLICATION, ABUSE, MISUSE, ACTS OF GOD, UNAUTHORIZED ALTERATION OF THE KAGE INNOVATION PRODUCT, OR SUBSTITUTION OF PARTS NOT AUTHORIZED IN WRITING BY KAGE INNOVATION.

To obtain service under this warranty the consumer must return the defective Kage Innovation product to Kage Innovation directly, the dealer from which the product was purchased or to any authorized Kage Innovation dealer, transportation and freight charges prepaid. Only Kage Innovation dealers are authorized to perform the obligations under this warranty with pre-authorization from Kage Innovation.

No person is authorized to alter or amend this warranty or to create any warranty other than that set forth herein without the expressed written consent of Kage Innovation.

Kage Innovation reserves the right to make improvement changes on any of our products without prior notice.

Revision Comments

Date	Name	Description
10-29-2023	Mike	Fixed typo on carriage bolt qty for SDP144
10-29-2023	Mike	Added references to V2 pusher panels with larger cutouts for bushings