Owners Manual

SnowStorm System

Revision # 28

Covers Serial Numbers Starting:

SS120-3021

SS144-3062

SS168-3031

Kage Innovation™ LLC
502 Simmon Dr. Osceola, WI 54020
kageinnovation.com
(844) 314 – KAGE

Kage Limited Warranty

Kage Innovation will repair or, at the option of Kage Innovation, replace those parts which prove defective due to material or workmanship under normal use for a period of two (2) years from the date of retail sale or date of invoice from Kage Innovation, whichever is later. Expendable items, such as rubber, or polyurethane are excluded from this warranty.

Kage Innovation warrants that the products manufactured by us to be in accordance with our published specifications or those specifications agreed to by us in writing at the time of sale. The obligation of Kage Innovation is expressly limited to repairing or replacing, at its option, any product not meeting such specifications within the warranty period.

LIMITATIONS OF WARRANTY AND DAMAGES

KAGE INNOVATION MAKES NO OTHER WARRANTY, EXPRESSED OR IMPLIED, AND MAKES NO WARRANTY OF MERCHANTABILITY OR OF FITNESS FOR ANY PARTICULAR PURPOSE. THERE ARE NO WARRANTIES WHICH EXTEND BEYOND THE FACE HEREOF.

IN NO EVENT SHALL KAGE INNOVATION, BE HELD LIABLE FOR SPECIAL, INCIDENTAL OR CONSEQUENTIAL DAMAGES OR FOR DAMAGES RESULTING FROM MISAPPLICATION, ABUSE, MISUSE, ACTS OF GOD, UNAUTHORIZED ALTERATION OF THE KAGE INNOVATION PRODUCT, OR SUBSTITUTION OF PARTS NOT AUTHORIZED IN WRITING BY KAGE INNOVATION.

To obtain service under this warranty the consumer must return the defective Kage Innovation product to Kage Innovation directly, the dealer from which the product was purchased or to any authorized Kage Innovation dealer, transportation and freight charges prepaid. Only Kage Innovation dealers are authorized to perform the obligations under this warranty with pre-authorization from Kage Innovation.

No person is authorized to alter or amend this warranty or to create any warranty other than that set forth herein without the expressed written consent of Kage Innovation.

Kage Innovation reserves the right to make improvement changes on any of our products without prior notice.

SS Loader Assembly
KBSS{SIZEFT}{QUICKCOUPLER}{HYDRAULICGROUP}

Version# 28

Maintenance:

- ☐ Regularly check nuts and bolts for proper tightness
- ☐ Grease King Pin every 30 hrs of use
- ☐ Grease Slot Plate every 60 hrs of use

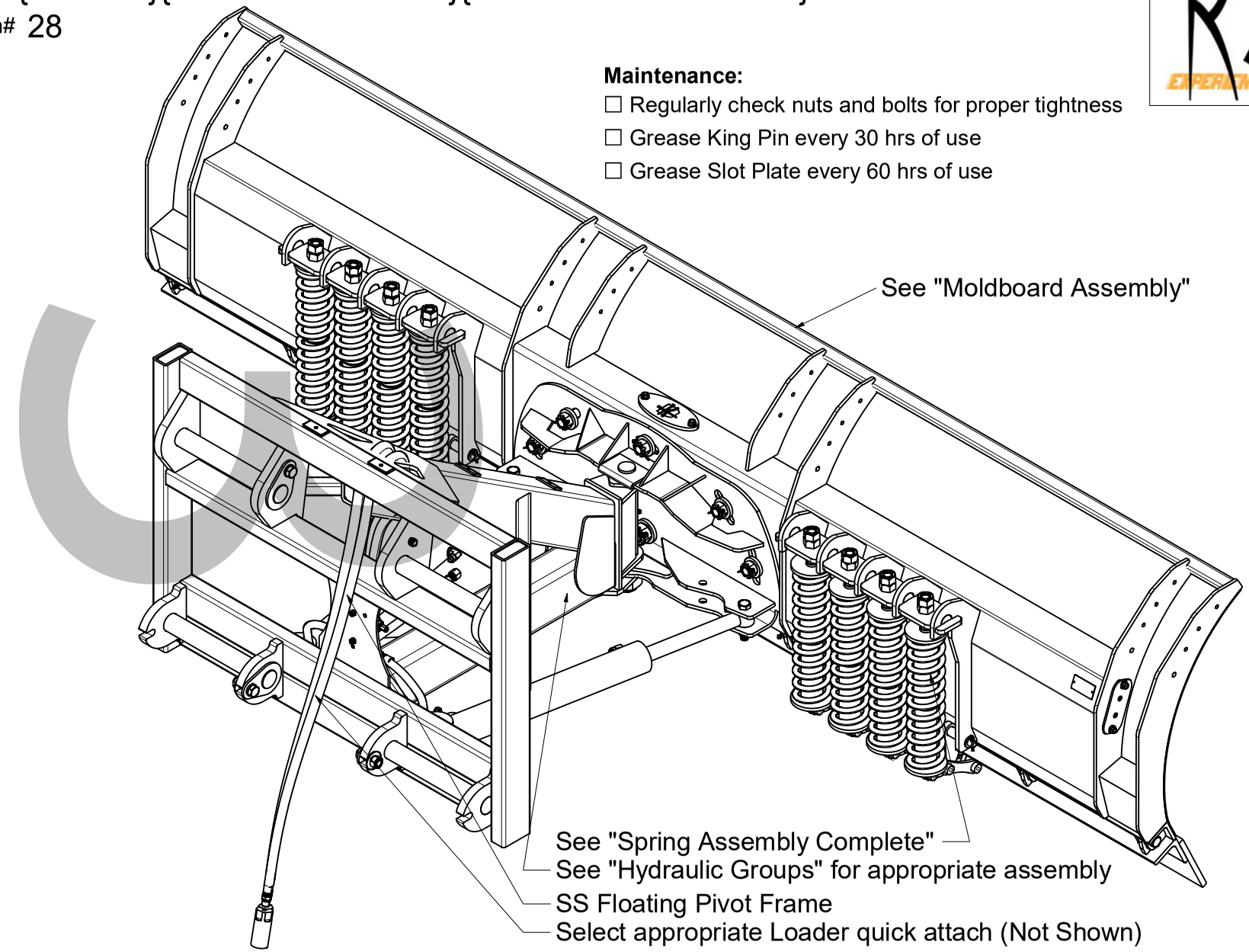

Copyright Kage Innovation All Rights Reserved www.kageinnovation.com 651 433 4628

SS 3 Point Assembly
KBSS{SIZEFT}{HYDRAULICGROUP}{HITCHASSY}

Version# 2

Maintenance:

- ☐ Regularly check nuts and bolts for proper tightness
- ☐ Grease King Pin every 30 hrs of use
- ☐ Grease Slot Plate every 60 hrs of use

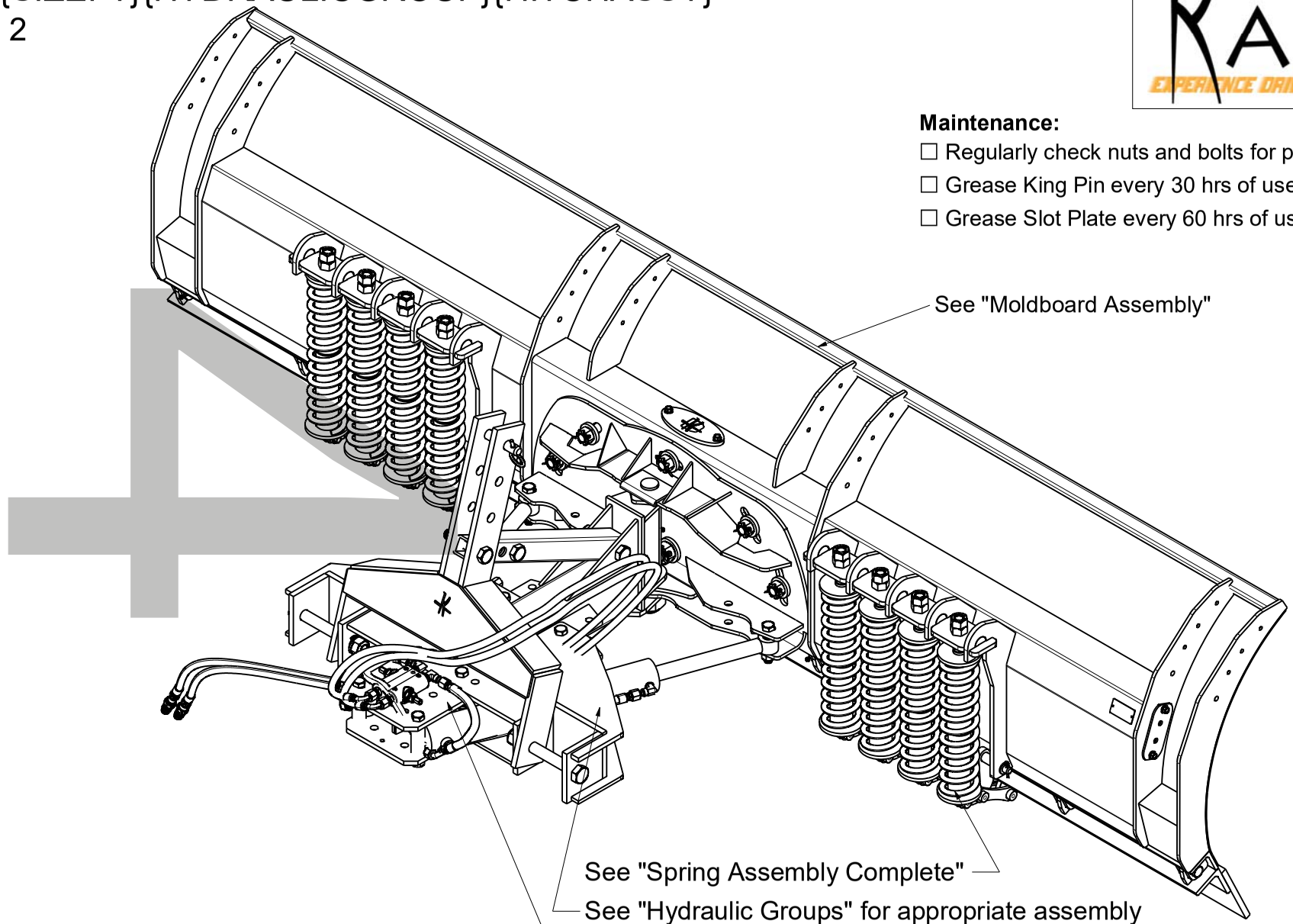

Copyright Kage Innovation All Rights Reserved www.kageinnovation.com 651 433 4628

Floating Pivot Frame Assy
KBW-PF

Version#

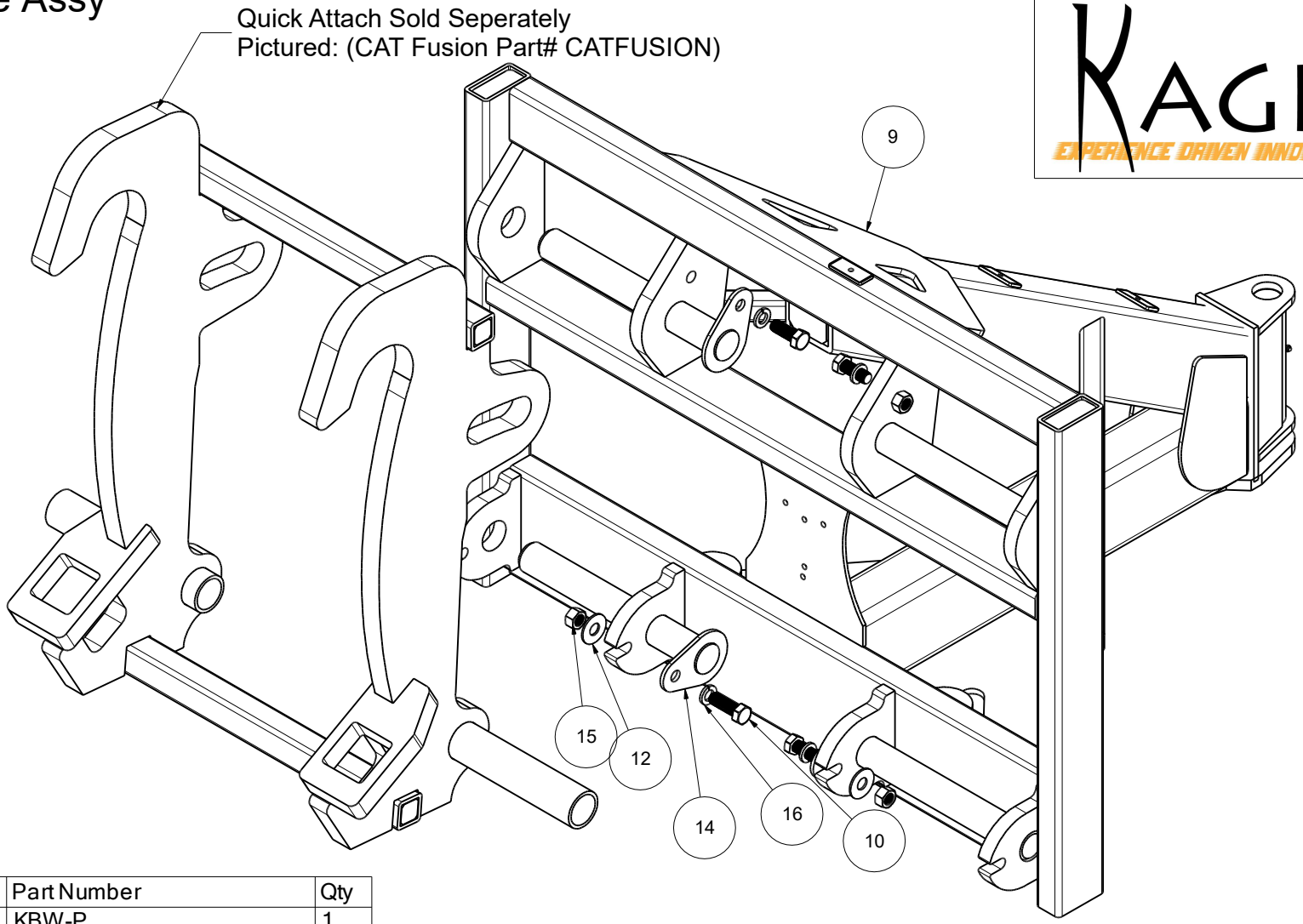

Item	Part Name	Part Number	Qty
9	PIVOT FRAME GROUP	KBW-P	1
10	Hex Bolt GR5 3/4-10 x 2.25	92865A844	2
11	Hex Bolt GR5 3/4-10 x 2	92865A843	2
12	3/4" Flat Washer	90108A036	2
13	Quick Attach	See Available Quick Attaches	0
14	Float Pin	67-001	4
15	CenterLocknut GR2 3/4-10	90040A147-K5	4
16	Lockwasher 3/4	91102A036	4

Copyright Kage Innovation All Rights Reserved www.kageinnovation.com 651 433 4628

3 Point Pivot Frame Kit

KT-560

Version# 50

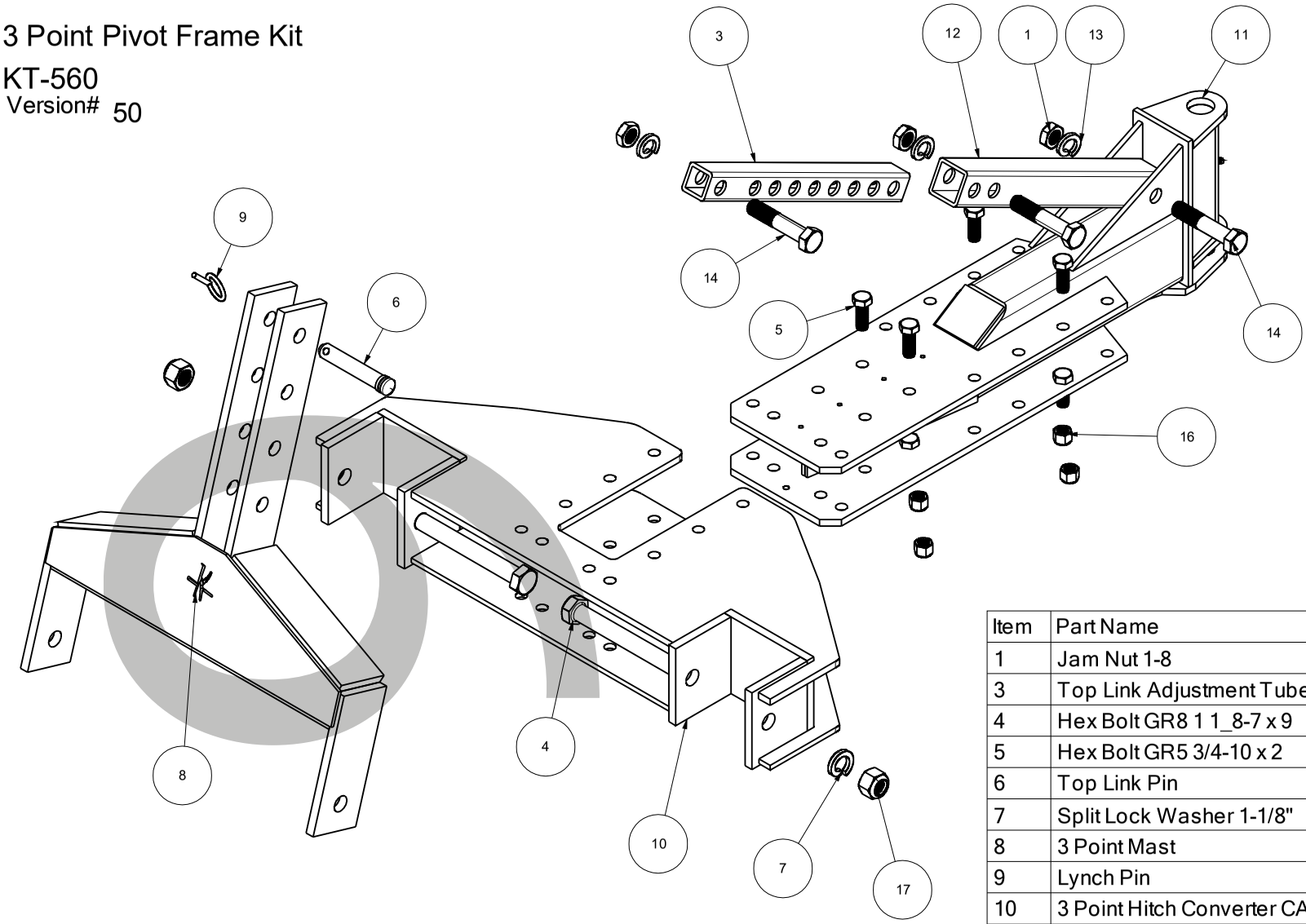

Item	Part Name	Part Number	Qty
1	Jam Nut 1-8	94846A550	3
3	Top Link Adjustment Tube Male	20-100	1
4	Hex Bolt GR8 1 1_8-7 x 9	H8P 113 0900 7	2
5	Hex Bolt GR5 3/4-10 x 2	92865A843	7
6	Top Link Pin	21262	1
7	Split Lock Washer 1-1/8"	91102A039	2
8	3 Point Mast	12-200	1
9	Lynch Pin	90170A226	1
10	3 Point Hitch Converter CAT2	8P9-8200	1
11	PIVOT FRAME GROUP 3 POINT	KBW-PF-3POINT	1
12	Top Link Adjustment Tube Female	20-120	1
13	Lockwasher 1"	91102A038	3
14	Hex Bolt GR8 1-8 x 5	91257A965	3
16	Hex Nylock Nut GR 5 3/4-10	95615A270	8
17	Hex Nylock Nut 1 1/8-7	95615A340	2

Copyright Kage Innovation All Rights Reserved www.kageinnovation.com 651 433 4628

Moldboard Assy SS 12

KBSS12

SS120-3021
SS144-3062
SS168-3031

Version # 4

Version Starting Serial # 131-2342

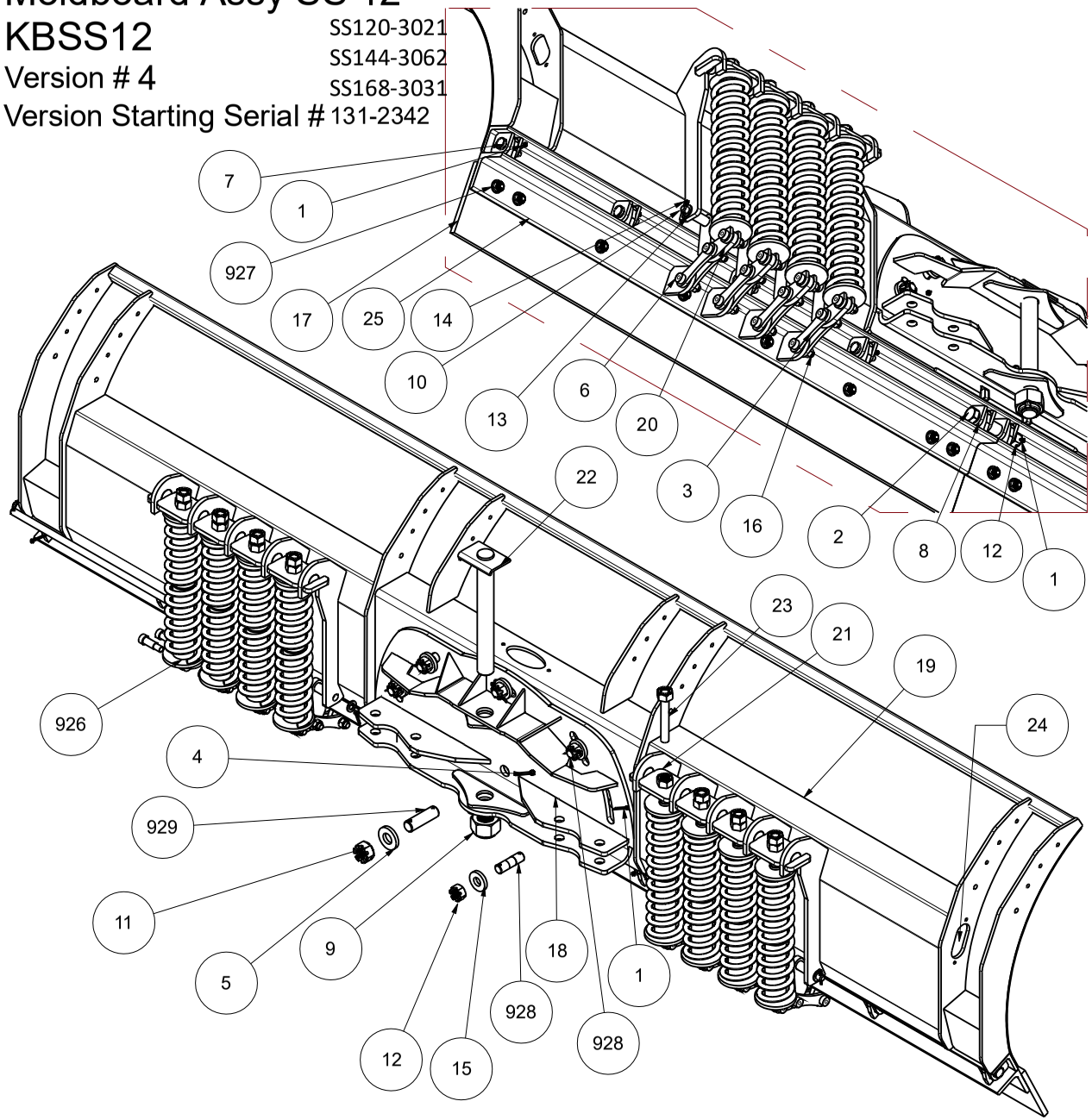

Item	Part Name	Part Number	Quantity
1	Cotter Pin 3/16 x 2	98338A516	14
2	Hex Bolt GR8 1-8 x 6.5 w Hole	91257A970-K5	1
3	Link, Trip Link	01-009	16
4	Cotter Pin, 1/4 x 2 1/2	98338A325	1
5	1.25 x .375 washer	125W	1
6	Shoulder Bolt, 3/4S - 5/8-11	91264A798	24
7	Clevis Pin	98306A677	8
8	Stop Bushing	909-4	2
9	Hex Locknut 1.75-5	90621A070	1
10	Spring Connector Pin	67-000	2
11	Slotted Nut Gr5 1 1/4-7	95030A350	1
12	Slotted Nut 1-8	97190A040-K8	6
13	Shimming Washer, 1.25 x .75	97669A400	4
14	Cotter Pin, 3/16 x 1.5"	98338A270	4
15	1-.375 washer	13W	5
16	Hex Nylock GR2 5/8-11	90040A143	24
17	Cutting edge 6' x 8"	SBCSS72	2
18	SLOT PLATE GROUP LG	12-555	1
19	Moldboard Weldment SS 12	KD12	1
20	Trip Arm	34-700	8
21	Spring Block	55-700	2
22	King Pin LG	23-333	1
23	Spring Bolt	23-000	8
24	Line, Dist Block to Bulkhead LG	1-670	4
25	Base Angle Group SS 6	423-6	2
926	Spring Assembly Complete	SP-7200	8
927	Cutting Edge Hardware Kit SS 6	CEHKSS-6	2
928	Gr 8 Stud 1-8	66-100	5
929	GR8 Stud 1.25-7	66-125	1

Copyright Kage Innovation All Rights Reserved
www.kageinnovation.com (844) 314-KAGE

Weight LBS 1404.14

Curb Guard Kit
KTCG180

Version#

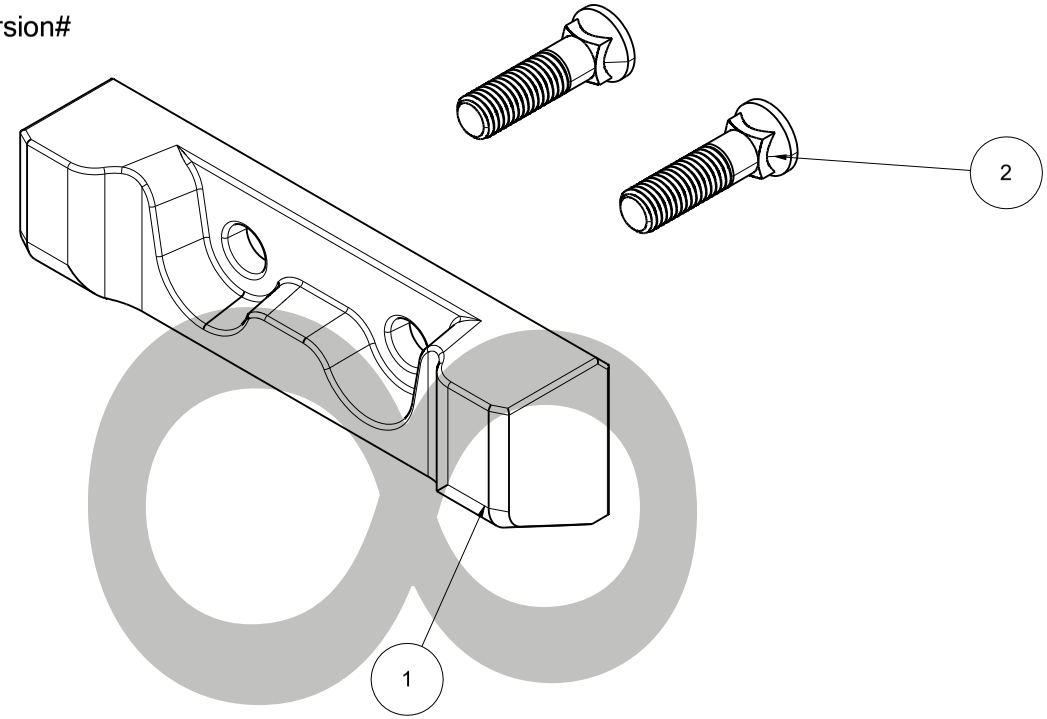

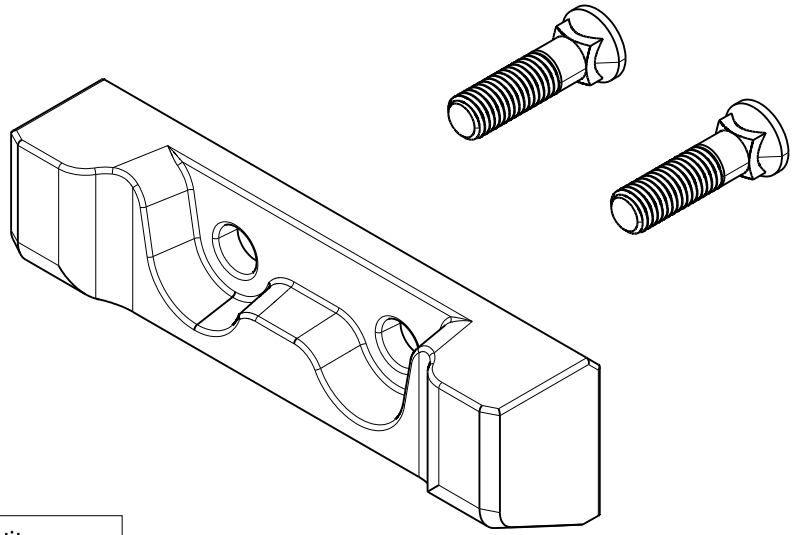

Item Number	Part Name	Configuration Name	Part Number	Quantity
1	SF Curb Guard	U Cut	100-11	2
2	Plow Bolt 5-8 - 11 x 2 1-2	Config<1>	90934A804	4

Copyright Kage Innovation All Rights Reserved www.kageinnovation.com (844) 314-KAGE

Spring Assembly, Complete
SP-7200

Version# 49

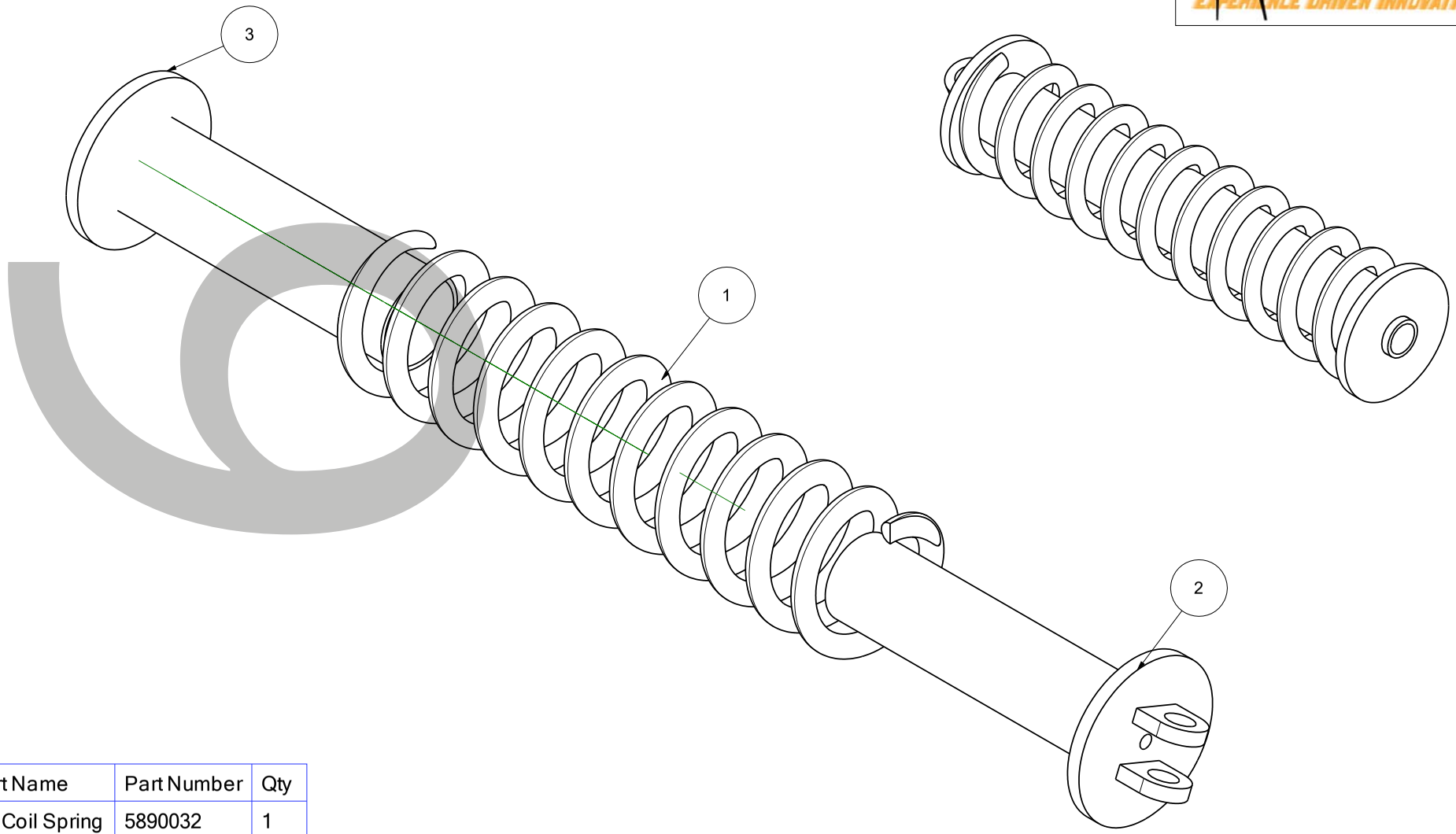

Item	Part Name	Part Number	Qty
1	SS Coil Spring	5890032	1
2	Spring Bottom	SP-005	1
3	Spring Top	64-700	1

Copyright Kage Innovation All Rights Reserved www.kageinnovation.com (844) 314-KAGE

Hydraulic Group Standard
HYDS-1

Version# 2

Version Starting Serial #

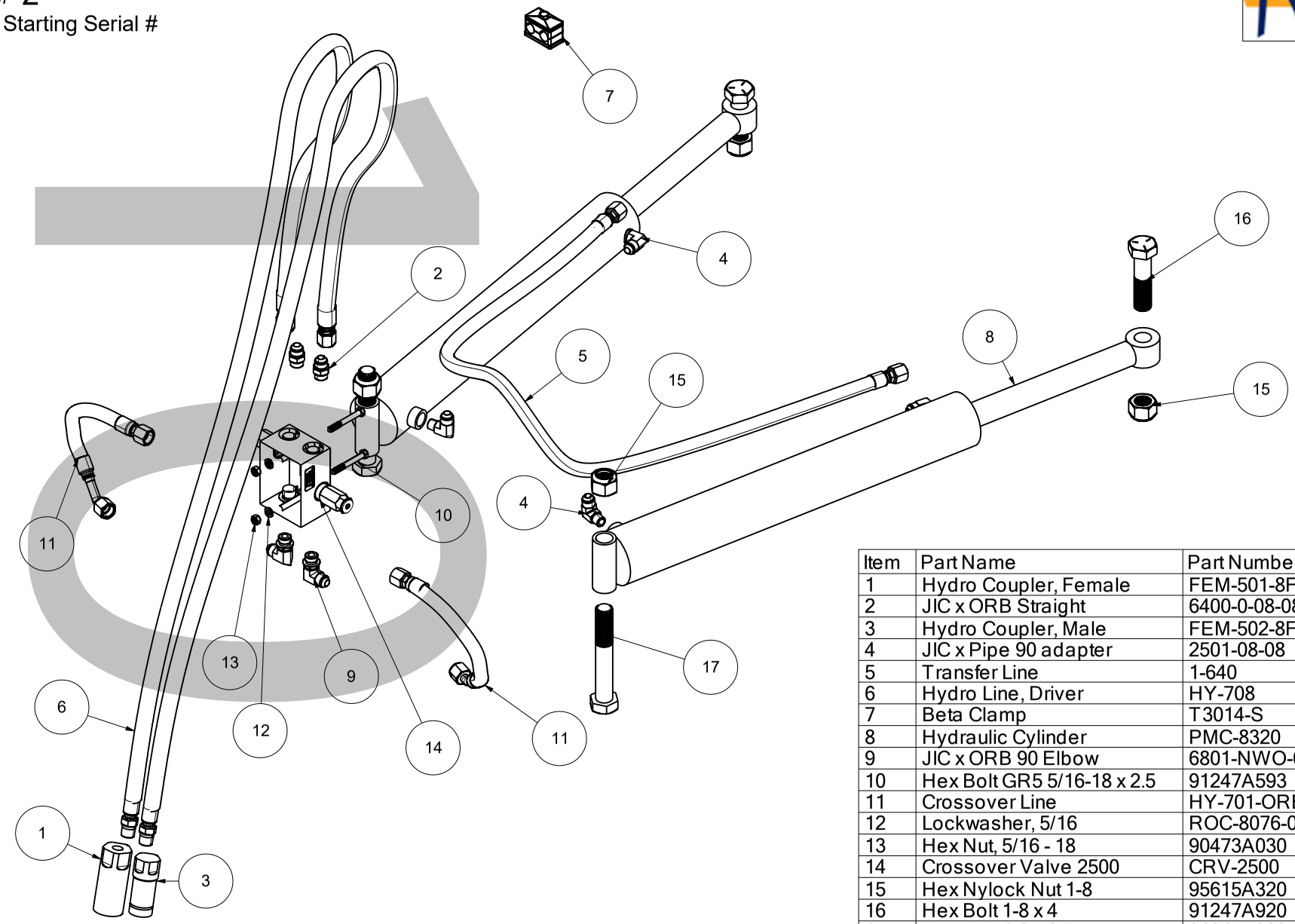

Item	Part Name	Part Number	Qty
1	Hydro Coupler, Female	FEM-501-8FP-NL	1
2	JIC x ORB Straight	6400-0-08-08	2
3	Hydro Coupler, Male	FEM-502-8FP	1
4	JIC x Pipe 90 adapter	2501-08-08	4
5	Transfer Line	1-640	1
6	Hydro Line, Driver	HY-708	2
7	Beta Clamp	T3014-S	1
8	Hydraulic Cylinder	PMC-8320	2
9	JIC x ORB 90 Elbow	6801-NWO-08-08	2
10	Hex Bolt GR5 5/16-18 x 2.5	91247A593	2
11	Crossover Line	HY-701-ORB	2
12	Lockwasher, 5/16	ROC-8076-030	2
13	Hex Nut, 5/16 - 18	90473A030	2
14	Crossover Valve 2500	CRV-2500	1
15	Hex Nylock Nut 1-8	95615A320	4
16	Hex Bolt 1-8 x 4	91247A920	2
17	Hex Bolt 1-8 x 6.5	91247A929	2

Copyright Kage Innovation All Rights Reserved www.kageinnovation.com (844) 314-KAGE

Hydro Group w Valve
HYES-1

Version# 3

Version Starting Serial #

KBSS10 131-2187
KBSS12 131-2342
KBSS14 131-2262

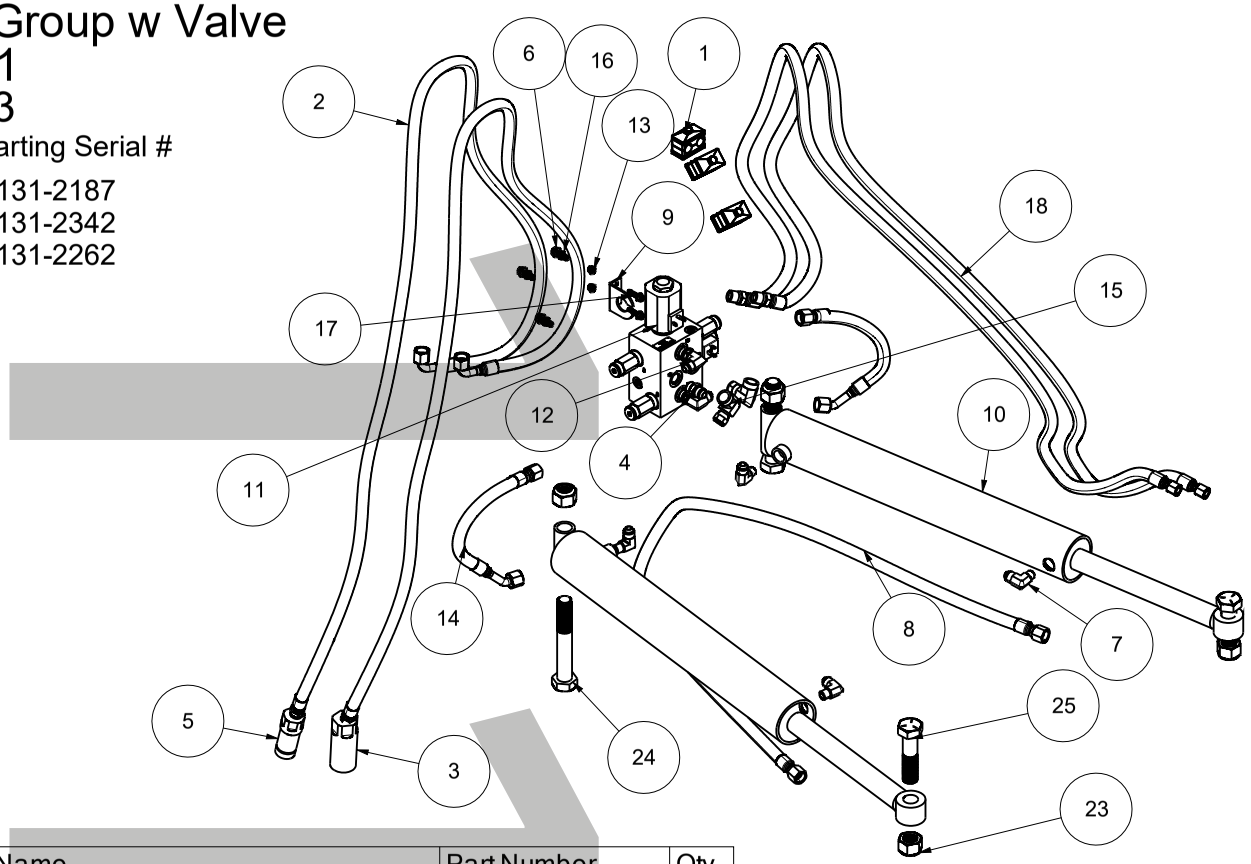

Item	Part Name	Part Number	Qty
1	Beta Clamp	T3014-S	3
2	Hydro Line, Pass	HY-707	2
3	Hydro Coupler, Female	FEM-501-8FP-NL	1
4	JIC x ORB Straight	6400-0-08-08	2
5	Hydro Coupler, Male	FEM-502-8FP	1
6	Flange Hex Bolt GR5 5/16 - 18 x 1	92979A253	3
7	JIC x Pipe 90 adapter	2501-08-08	4
8	Transfer Line	1-640	1
9	Cord Grip Bracket	20-980	1
10	Hydraulic Cylinder	PMC-8320	2
11	Valve Assy	C11258	1
12	JIC x ORB 90 Elbow	6801-NWO-08-08	2
13	Flange Nylock Nut 1/4-20	93298A110	2
14	Crossover Line	HY-701-ORB	2

Item	Part Name	Part Number	Qty
15	Female JIC 08 x Female NPT 08 90Elbow	6503-08-08	2
16	Lockwasher, 5/16	ROC-8076-030	3
17	Flange Hex Bolt GR5 1/4-20 x 1"	92979A122	2
18	Line Valve to Dist. Block	1-765	2
19	24VDC Series E Coil Large	6956024	0
20	12 VDC, DIN 43650 Large	6956012	0
21	Vickers 24VDC Coil Small	300AA00082A	0
22	12 VDC, DIN Small	300AA00081A	0
23	Hex Nylock Nut 1-8	95615A320	4
24	Hex Bolt 1-8 x 6.5	91247A929	2
25	Hex Bolt 1-8 x 4	91247A920	2
26	Plow Harness 8 Socket	PSCC520	1
27	Machine Harness 8 Pin	MSCC521	1

Copyright Kage Innovation All Rights Reserved www.kageinnovation.com (844) 314-KAGE

Hydraulic Schematic for SnowStorm Angle and Hydro Clamp Functions

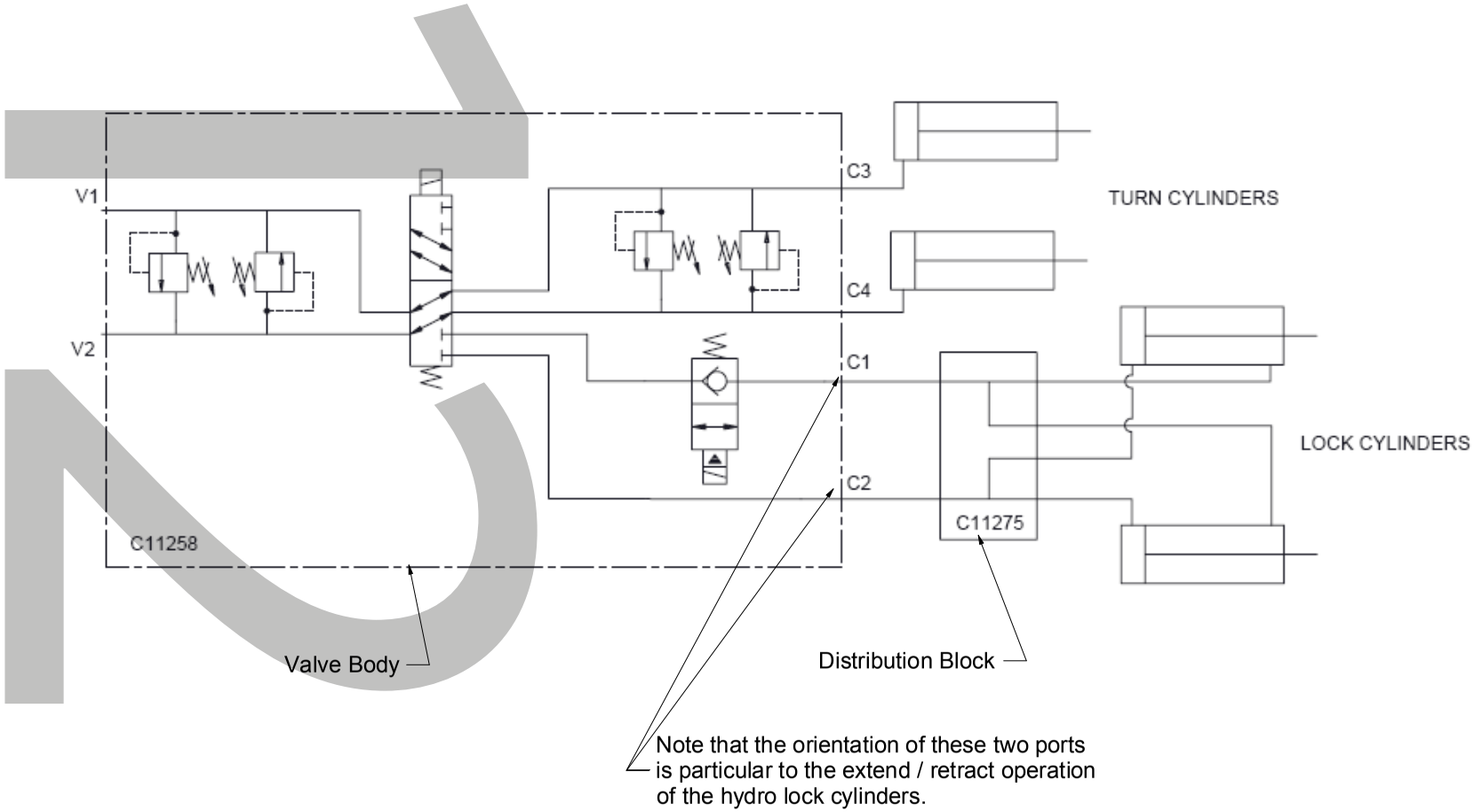

Copyright Kage Innovation 2010 All Rights Reserved

Hydraulic Group 3 Point Hitch SS
HYDRO3P-SS

Version# 2

Version Starting Serial #

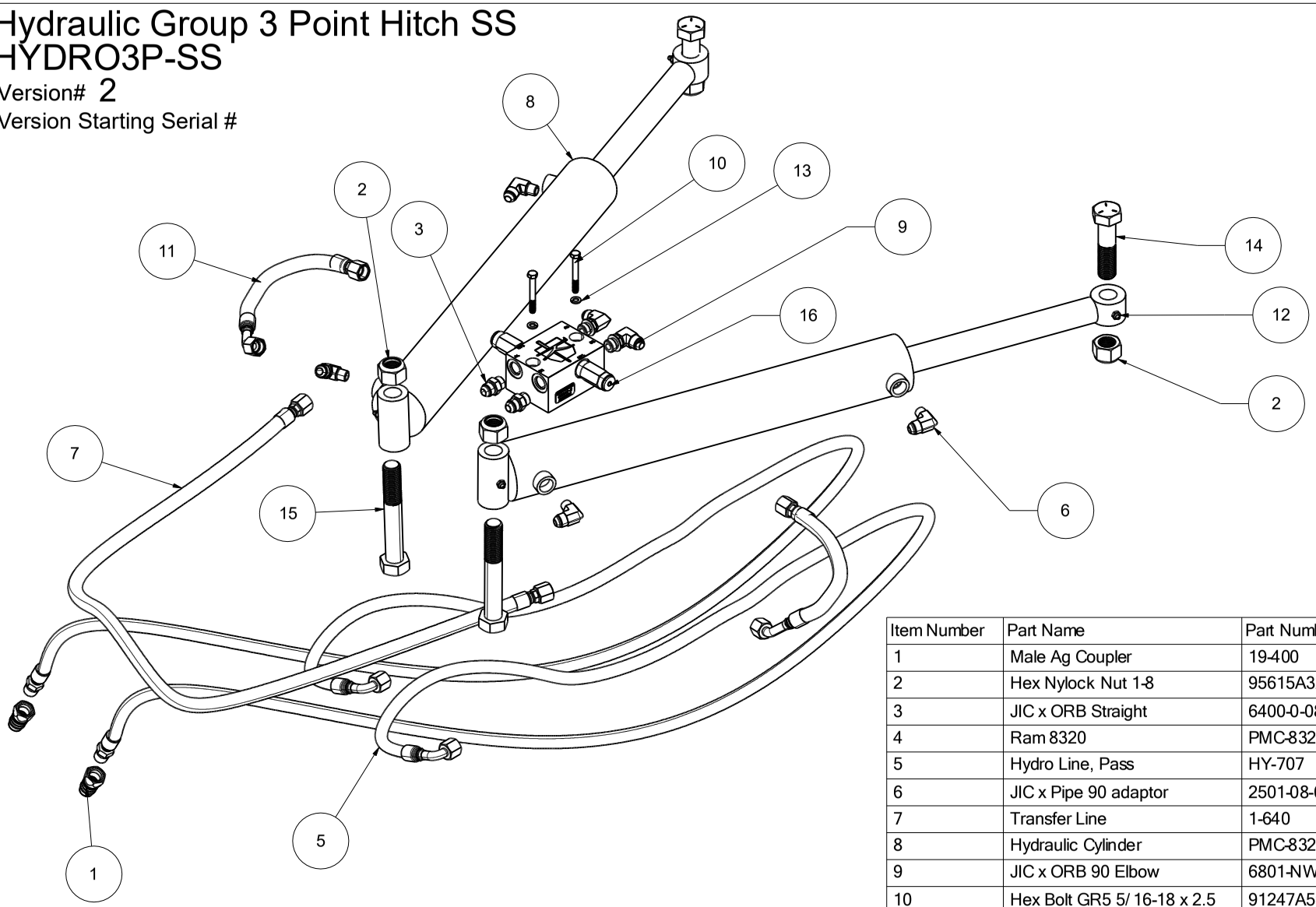

Item Number	Part Name	Part Number	Revision	Quantity
1	Male Ag Coupler	19-400		2
2	Hex Nylock Nut 1-8	95615A320		4
3	JIC x ORB Straight	6400-0-08-08		2
4	Ram 8320	PMC-8320		2
5	Hydro Line, Pass	HY-707		2
6	JIC x Pipe 90 adaptor	2501-08-08		4
7	Transfer Line	1-640		1
8	Hydraulic Cylinder	PMC-8320		2
9	JIC x ORB 90 Elbow	6801-NWO-08-08		2
10	Hex Bolt GR5 5/16-18 x 2.5	91247A593		2
11	Crossover Line	HY-701-ORB		2
12	Grease Zerk, 3/8-24	1095K96		4
13	Lockwasher, 5/16	ROC-8076-030		2
14	Hex Bolt 1-8 x 4	91247A920		2
15	Hex Bolt Grade 8 1-8x6.5	91257A970		2
16	Crossover Valve 3000	CRV-3000	2500	1

WEIGHT LBS

Copyright Kage Innovation All Rights Reserved www.kageinnovation.com (844) 314-KAGE

HD Hydro Lock Kit KT
HDL-KT

Version# 5

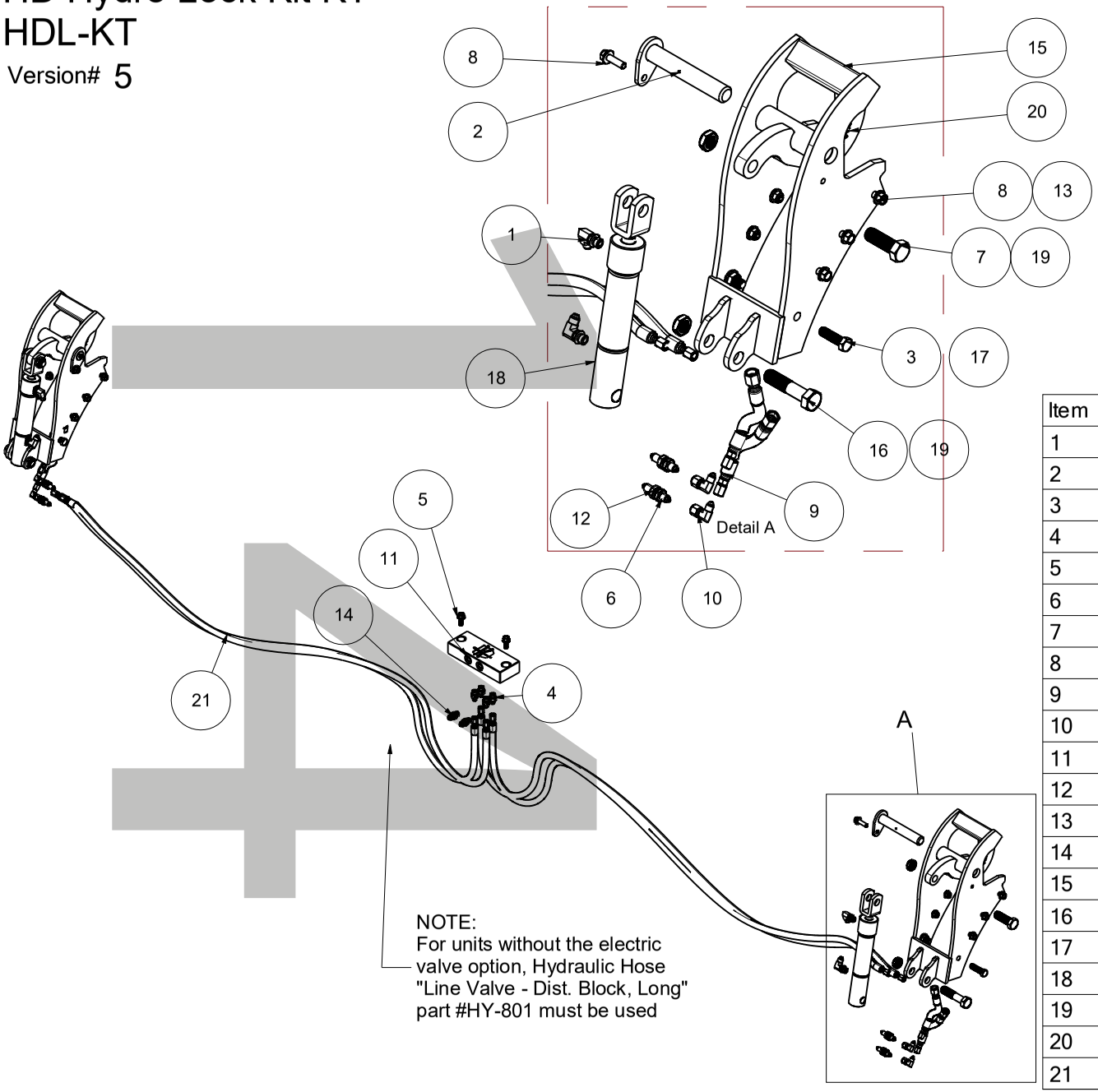

Item	Part Name	Part Number	Qty
1	JIC x ORB Elbow Adapter	6801-NWO-06-06	4
2	PIN GROUP	44	2
3	Hex Bolt GR5 1/2 - 13 x 1.75	92865A718	4
4	JIC - Oring 04x06	6400-0-04-06	4
5	Flange Hex Bolt, 3/8 - 16 x 1	92979A344	2
6	JIC Bulkhead 04x04	2700-04-04	4
7	Hex Bolt GR5 3_4-10 x 2.25	92865A844	2
8	Flange Hex Bolt 3/8 - 16 - 1.25	92979A348	14
9	Line, Blade to Hydro Clamp	1-871	4
10	JIC 90 Elbow 04X04	6500-04-04	4
11	Distribution Block	C11275	1
12	Bulkhead Nut GR5 7_16-20	94846A520	4
13	Flange Locknut, 3/8 -16	93298A130	12
14	JIC - Oring 06x06	6400-0-06-06	2
15	Hydro Bracket LG	51-350	2
16	Hex Bolt GR8 3/4-10 x 3.25"	91257A848	2
17	Flange Locknut 1/2 - 13	RF1213OFZ	4
18	Hydro Lock Cylinder	BM-0413	2
19	GR5 Hex Nut Thin Nylock 3/4-10	91342A230	4
20	Clamp Group	387	2
21	Line, Dist Block to Bulkhead LG	1-670	4

Copyright Kage Innovation All Rights Reserved www.kageinnovation.com 651 433 4628

HD Hydro Lock Kit 3 Point
HDL-3P

Version# 5

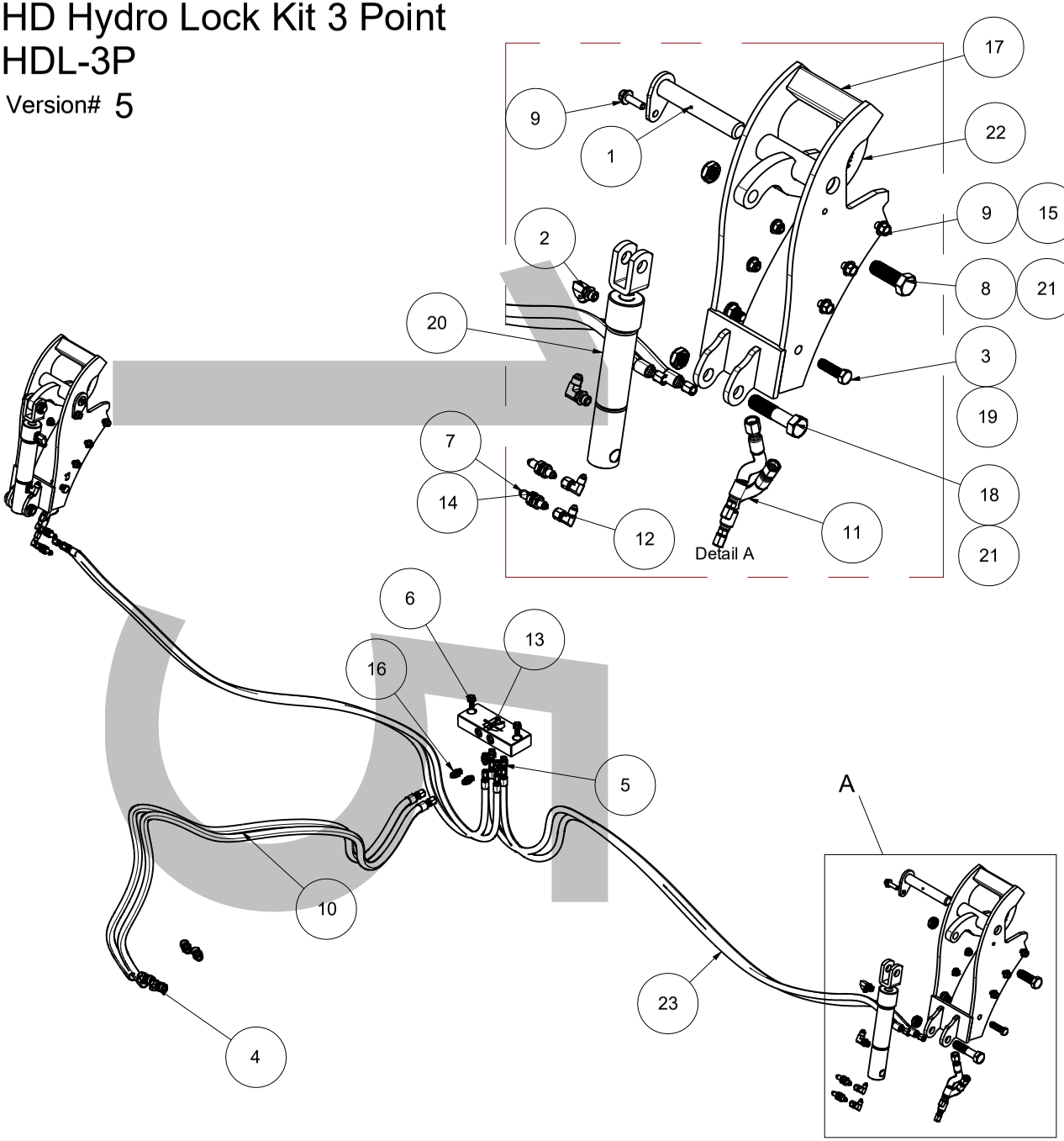

Item	Part Name	Part Number	Qty
1	PIN GROUP	44	2
2	JIC x ORB Elbow Adapter	6801-NWO-06-06	4
3	Hex Bolt GR5 1/2 - 13 x 1.75	92865A718	4
4	Male Ag Coupler	19-400	2
5	JIC - Oring 04x06	6400-0-04-06	4
6	Flange Hex Bolt, 3/8 - 16 x 1	92979A344	2
7	JIC Bulkhead 04x04	2700-04-04	4
8	Hex Bolt GR5 3_4-10 x 2.25	92865A844	2
9	Flange Hex Bolt 3/8 - 16 - 1.25	92979A348	14
10	Line Valve to Dist. Block	1-765	2
11	Line, Blade to Hydro Clamp	1-871	4
12	JIC 90 Elbow 04X04	6500-04-04	4
13	Distribution Block	C11275	1
14	Bulkhead Nut GR5 7_16-20	94846A520	4
15	Flange Locknut, 3/8 -16	93298A130	12
16	JIC - Oring 06x06	6400-0-06-06	2
17	Hydro Bracket LG	51-350	2
18	Hex Bolt GR8 3/4-10 x 3.25"	91257A848	2
19	Flange Locknut 1/2 - 13	RF1213OFZ	4
20	Hydro Lock Cylinder	BM-0413	2
21	GR5 Hex Nut Thin Nylock 3/4-10	91342A230	4
22	Clamp Group	387	2
23	Line, Dist Block to Bulkhead LG	1-670	4

Copyright Kage Innovation All Rights Reserved www.kageinnovation.com 651 433 4628

SnowKage XL Complete Assy
SKSS-{SIZEFT.}

Version#

Version Starting Serial # SKSS 200-2441

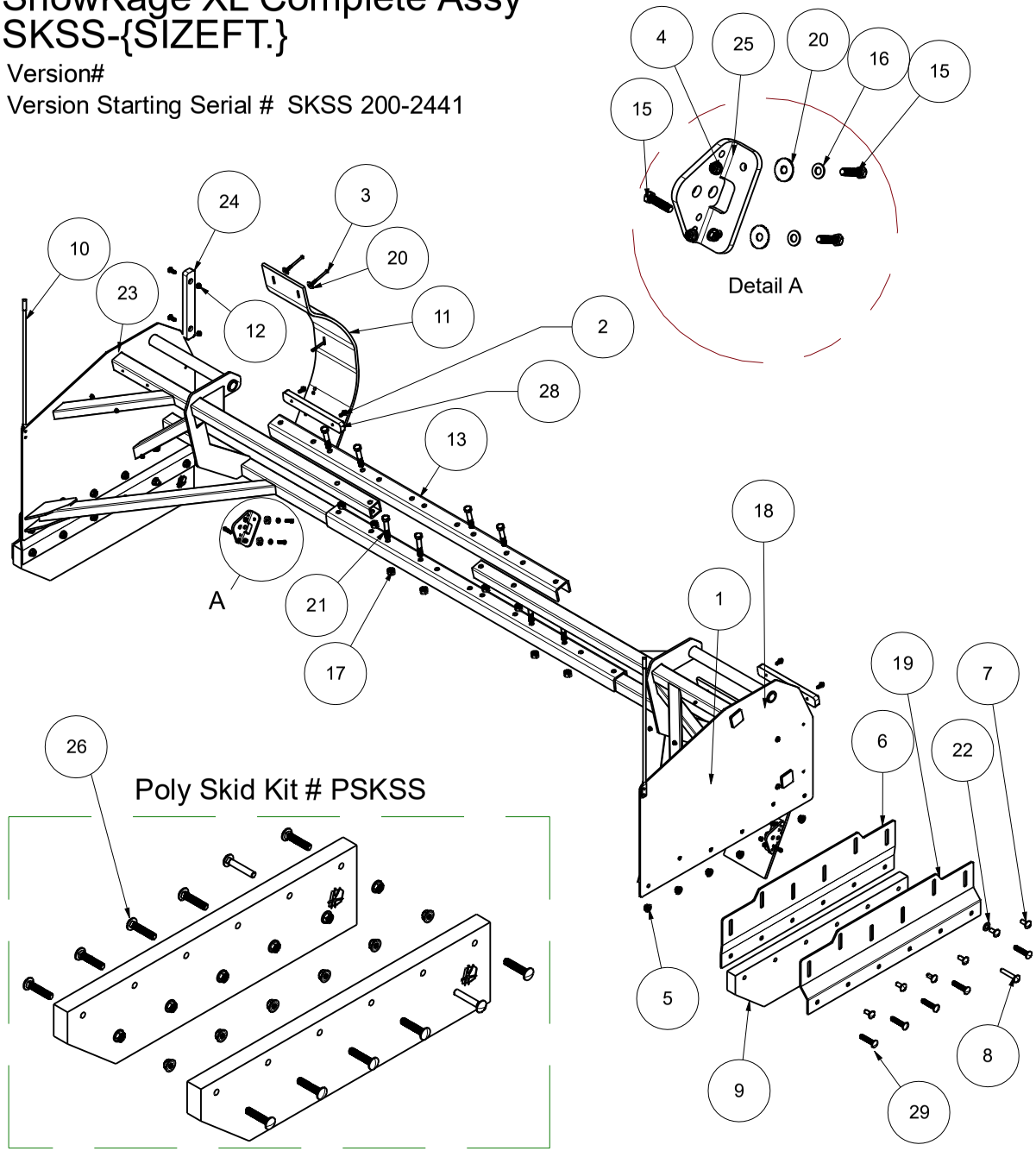

Item	Part Name	Part Number	Qty
1	SnowKage SS Decal	DEC-2	2
2	Flange Hex Bolt 3/8 - 16 x 1	92979A344	4
3	Hex Bolt 5/16-18 x 3.5"	91247A597	6
4	Flange Locknut 5/16-18	92018A320	12
5	Flange Locknut 5/8-11	3221357	24
6	Skid Support, Inner	23-102-P	2
7	Carriage Bolt 5/8-11 x 1.5	K567009	12
8	Carriage Bolt 5/8-11 x 3.5"	90185A822	2
9	Poly Skid SS	PE-900	2
10	Plow Guide	W-1578	2
11	Snow Catch SS	R77-2	2
12	Flange Locknut, 3/8 -16	93298A130	4
13	Center C Channel	55-003	2
14	Name Plate	KAGE001-11399-2	1
15	Hex Bolt GR5 3/8-16 x 1.5	92865A628	6
16	Flat Washer 3/8	ROC-8071-031	4
17	CenterLocknut GR2 3/4-10	90040A147-K5	8
18	SnowKage Side Frame, Driver	SFLD-12	1
19	Skid Support, Outer	23-103-P	2
20	Fender Washer, 3/8	91090A121	10
21	Hex Bolt GR8 3/4-10 x 4"	91257A851	8
22	Flat Washer 20mm	91166A320	2
23	SnowKage Side Frame, Passenger	SFLP-12	1
24	Isolator Black	N24-1	2
25	Snow Catch Angle LG	12-900	2
26	Poly Skid Kit SS	PSKSS	0
27	Carriage Bolt GR5, 3/8 - 16 x 1	ROC-2131-624	4
28	Isolator	N24-2	2
29	Carriage Bolt 5/8-11 x 3.25	90185A258	10

Copyright Kage Innovation All Rights Reserved www.kageinnovation.com (844) 314-KAGE