Snow Dozer™

2-in-1 System

REV: 2024.7.15

KAGE® Innovation LLC 502 Simmon Drive Osceola, WI 54020 | (844) 314 - Kage | www.kageinnovation.com

Snow Dozer Owners Manual

Revision 2024.7.15

Contents:

Configurations 3
Routing Instructions 4
Specifications 6
Parts Breakdowns 8-21
Schematics 22

SnowDozer Configurations

1: Plow Configurations

The SnowDozer Plow is offered in 2 configurations. Each configuration has a different parts list for the plow center section.

- 2-in-1 system with a removable box. The parts breakdown for the center section of the 2-in-1 system can be found on pages 11-12.
- Hydraulic wings. The breakdowns for the wing configuration can be found in the SnowDozer Wing Owners manual.

2-in-1 System

Wing Plow

2: Pivot Frame Configurations

The pivot frame also comes in 2 configurations: 3-Point for tractors and Quick Attach for loaders.

See page 18-20 for 3-Point specific parts breakdowns.

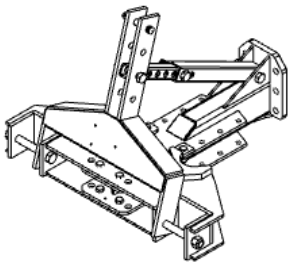

3-Point

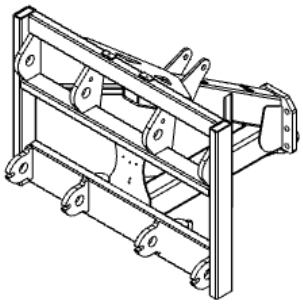

Loader Quick Attach

Routing wires and attaching SnowKage (2 in 1 System)

1

STEP 1

Attach plow to loader including hydraulics. Route machine wire harness up loader boom to 24v auto plug inside loader cab, fig 1. Ensure there is enough slack and follow pivot points while routing. 12v coils are available from factory, fig 2.

Fig. 1

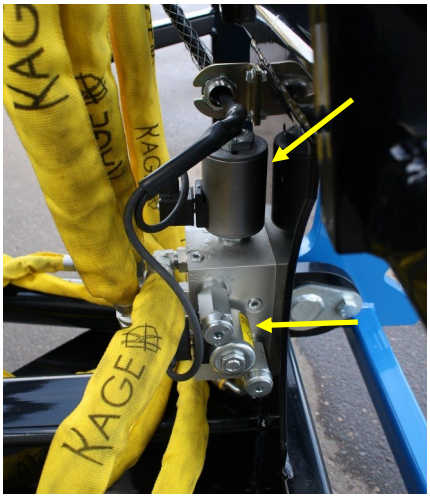

Fig. 2

2

STEP 2

Toggle switch, fig 3, on the machine wire harness will activate SnowKage locking pins. Fig 4, when hydraulics are activated. When switch is off, the plow will angle.

Fig 3

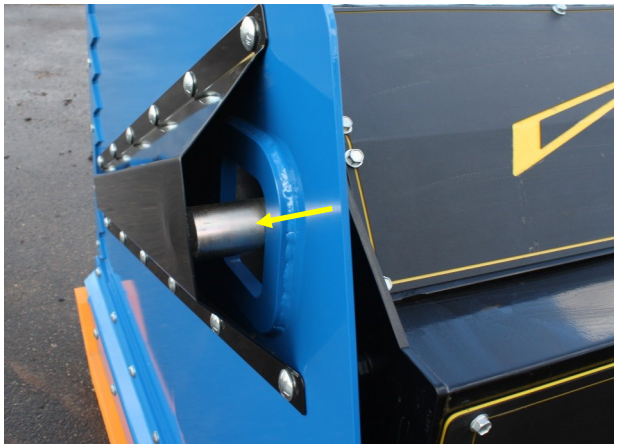

Fig 4

IMPORTANT CHANGE FALL OF 2024

IN FALL 2024 KAGE RE-DESIGNED THE SNOWDOZER MOLDBOARD TO ACCOMMODATE THE HYDRAULIC WING KIT. THIS CHANGE REQUIRED THAT WE ADD A C-CHANNEL TO THE LENGTH OF THE MOLDBOARD, DECREASE THE CENTER MOLDBOARD TO 6' RATHER THAN 8' AND OUTER SECTIONS. WE ALSO SWITCHED THE OSCILLATION CYLINDERS TO SPRING-RETRACT RATHER THAN 'PUSH'. THESE CHANGES ARE PICTURE BELOW.

OLD PRE-FALL-2024

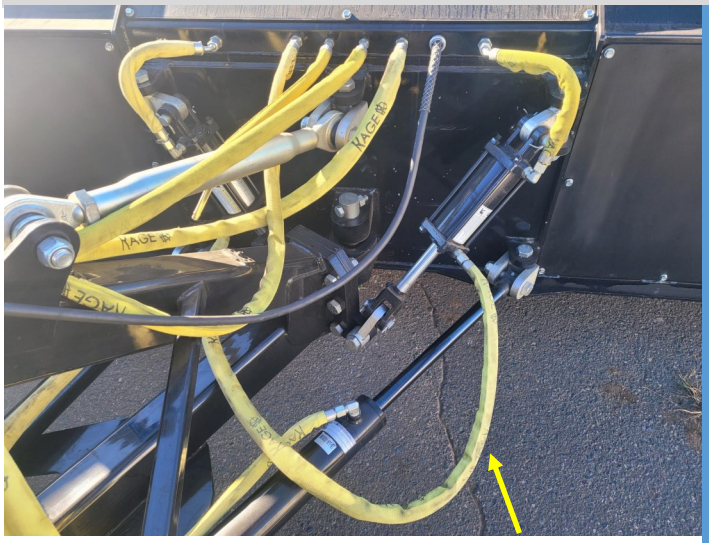

Air transfer line connecting oscillation retracting ports (OLD)

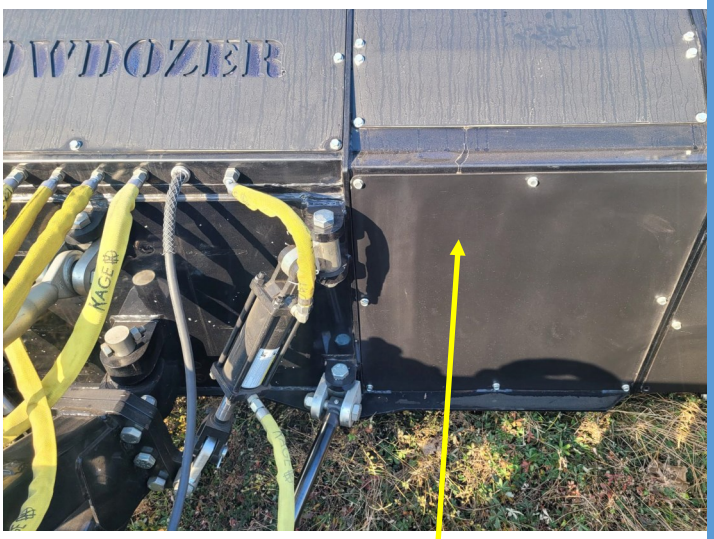

Solid 8' back—no channel for wing cylinders (OLD)

Fig 2

NEW POST FALL-2024

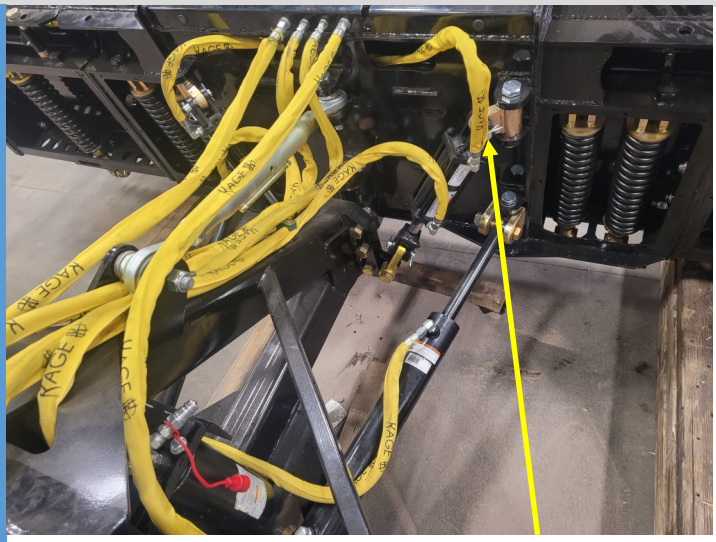

Air transfer line connecting oscillation extending ports (NEW)

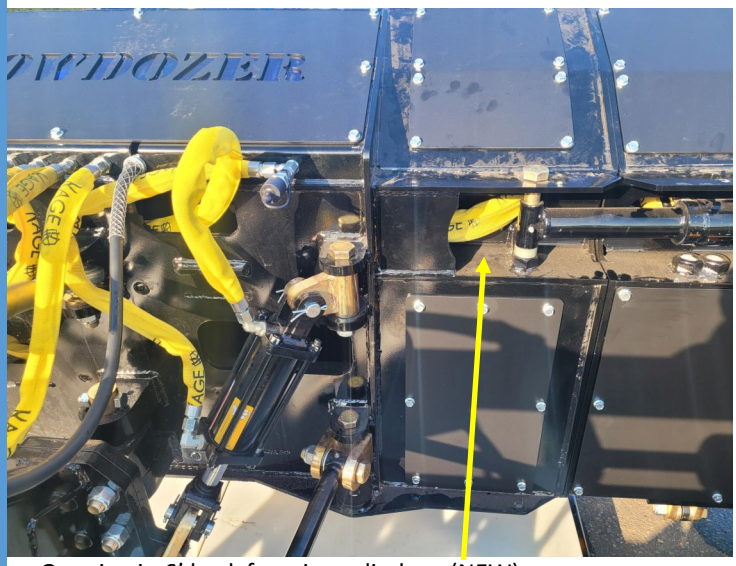

Opening in 6' back for wing cylinders (NEW)

Fig 3

SnowDozer 2 in 1 System Dimensions

Dimensions in inches may vary by 1/2"
12' 14' 16' 18' 20' Units

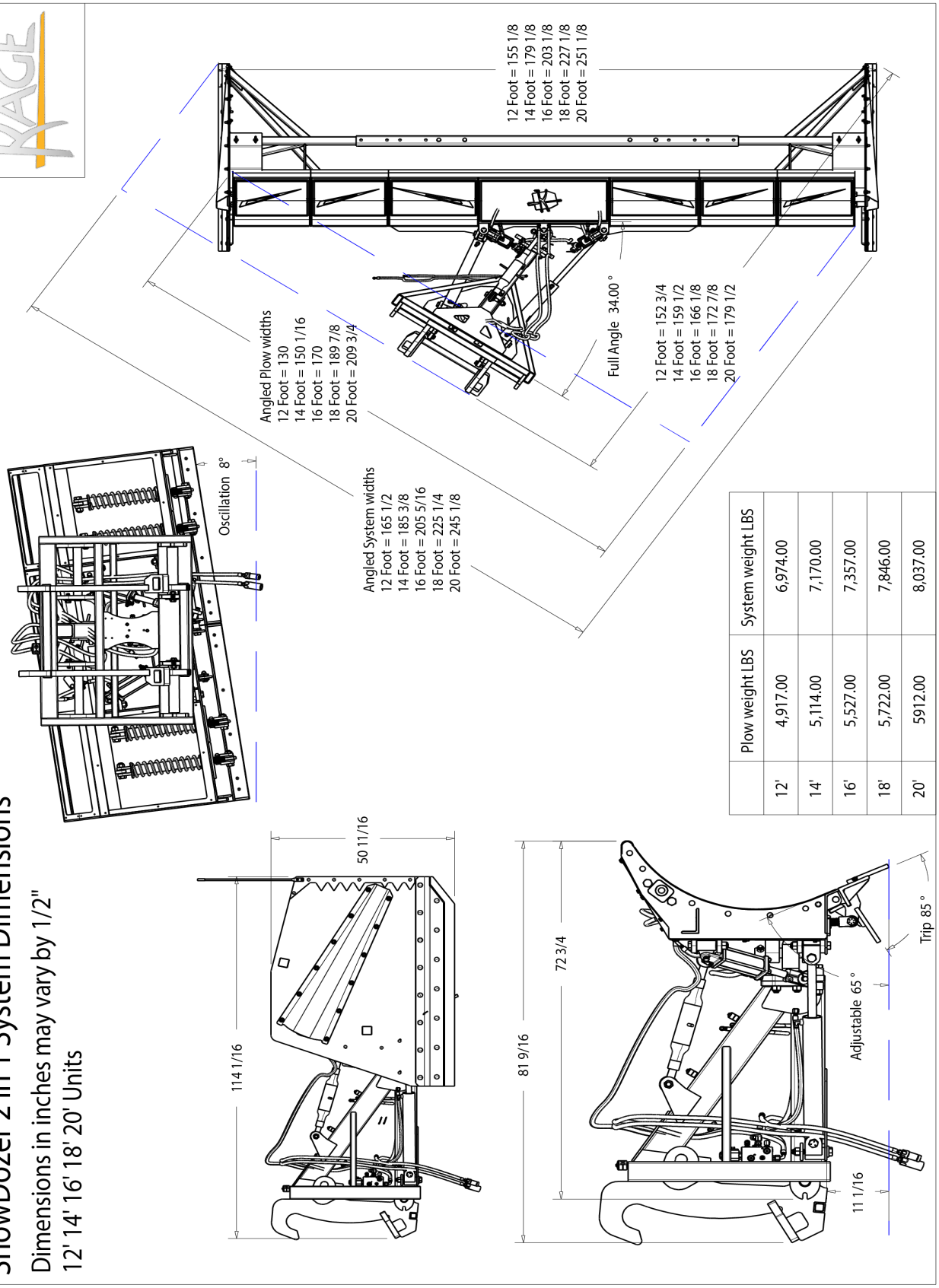

	Plow weight LBS	System weight LBS
12'	4,917.00	6,974.00
14'	5,114.00	7,170.00
16'	5,527.00	7,357.00
18'	5,722.00	7,846.00
20'	5912.00	8,037.00

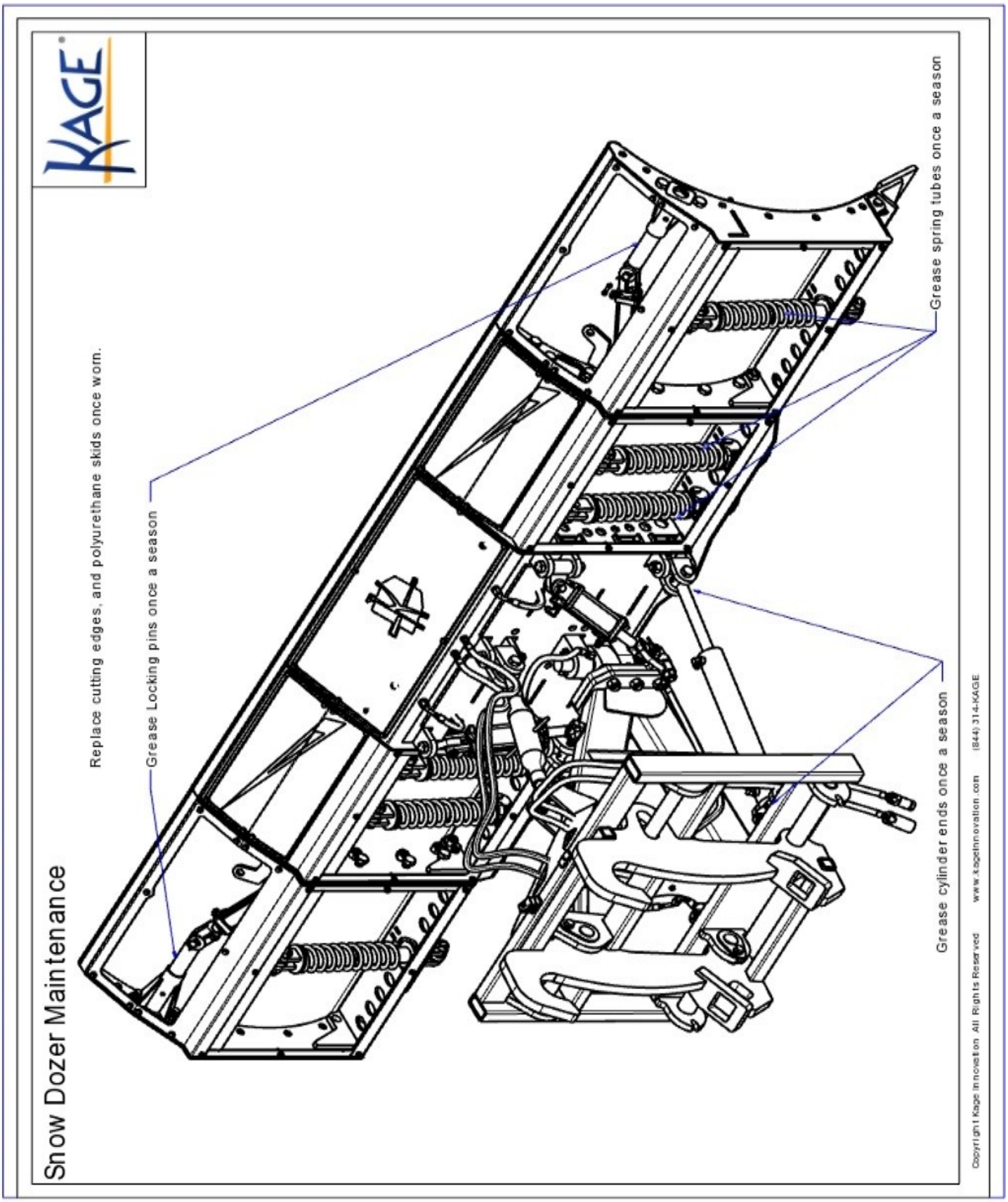
Snow Dozer Maintenance
Replace cutting edges, and polyurethane skids once worn.
Grease Locking pins once a season
Grease spring tubes once a season
Grease cylinder ends once a season
Copyright Kage Innovation All Rights Reserved
www.kageinnovation.com
(844) 314-KAGE

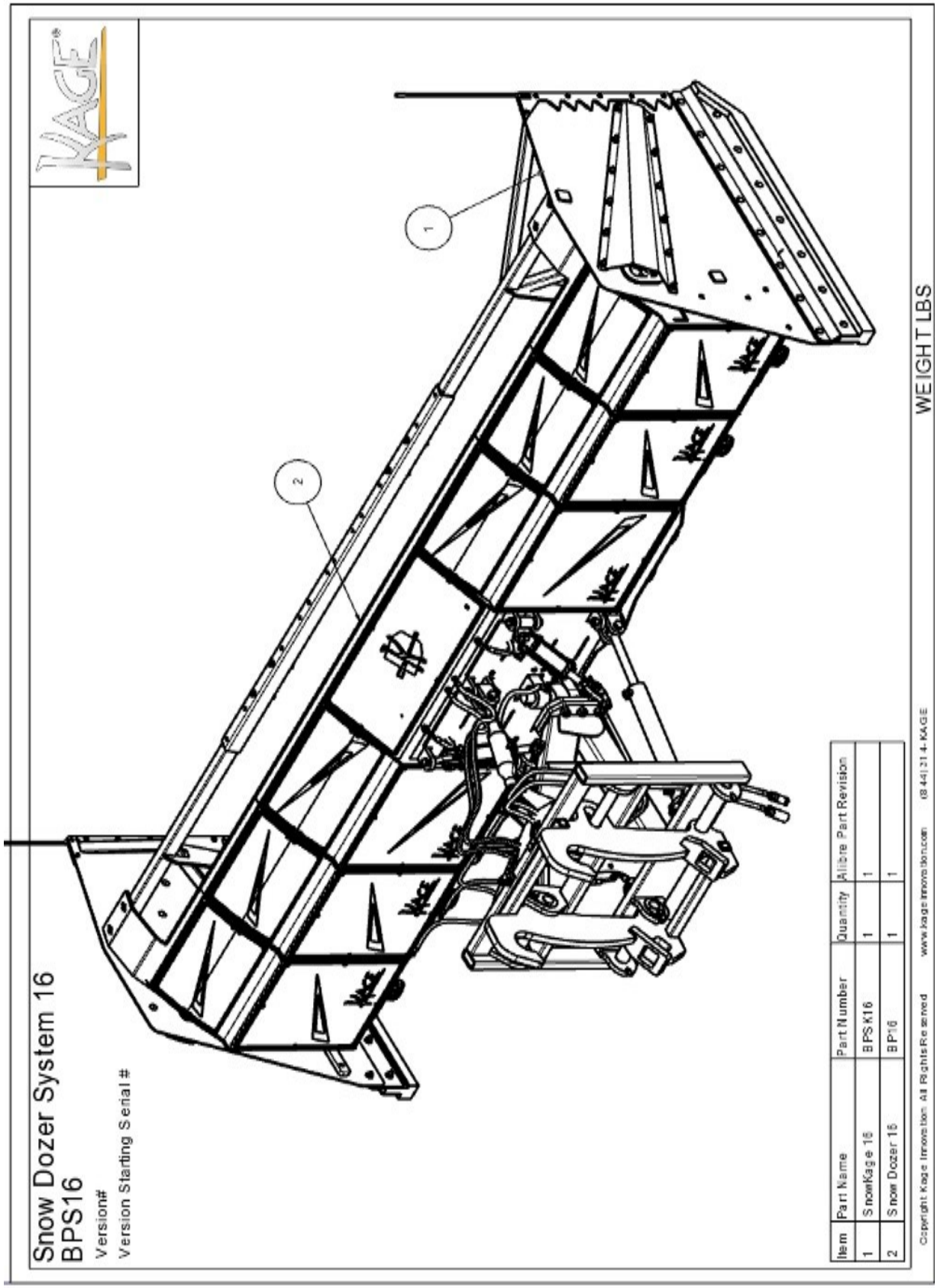

Item	Part Name	Part Number	Quantity	Allbre Part Revision
1	SnowKage 16	BPSK16	1	1
2	Snow Dozer 16	BP16	1	1

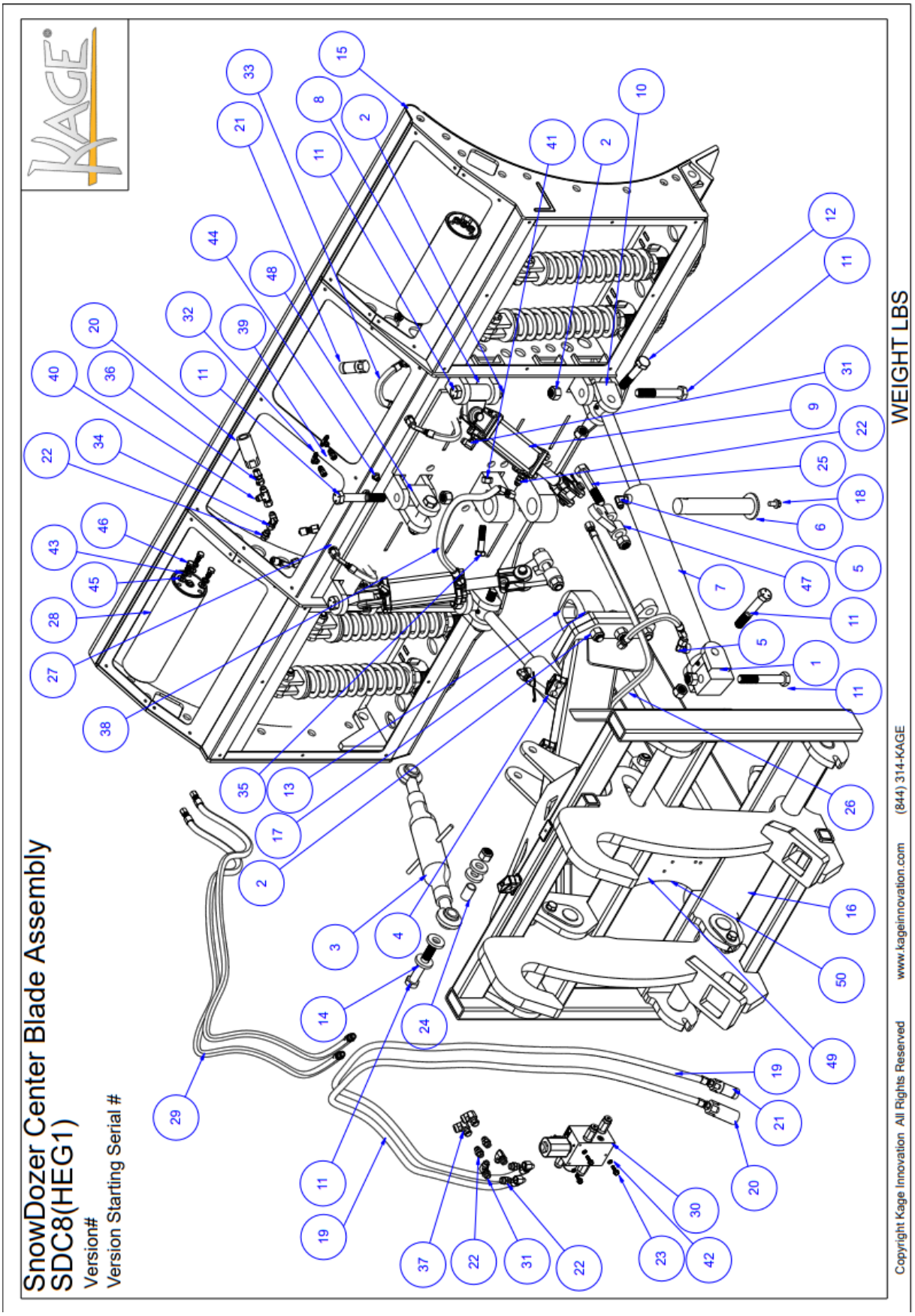
SnowDozer Center Blade Assembly
SDC8(HEG1)
Version#
Version Starting Serial #
WEIGHT LBS
Copyright Kage Innovation All Rights Reserved
www.kageinnovation.com
(844) 314-KAGE

Version#
Version Starting Serial #

Item	Part Name	Part Number	Quantity	Part Description
1	Cylinder Link Rear	CLR10	2	1
2	Hex Nylock Nut 1-8	95615A320	20	BLANK
3	Top Link CAT III	22530	1	BLANK
4	Hose Clamp Assy	T3014T	3	BLANK
5	JIC x Pipe 90 adaptor	2501-08-08	4	BLANK
6	King Pin Weldment	KPW16	1	1
7	Hydraulic Cylinder 8320	PMC-8320	2	BLANK
8	Cylinder Link Tilt	CLT10	2	1
9	Lift Cylinder Short	B300060ABAAA07B	2	BLANK
10	Cylinder Link Front	CLF10	2	1
11	Hex Bolt 1-8 x 6.5	91247A929	10	BLANK
12	Hex Bolt GR8 1-8 x 5	91257A965	3	BLANK
13	Pivot Frame Adaptor	PFA4	1	1
14	1-.375 washer	13W	4	46
15	Moldboard Assembly 8	SDM8	1	
16	Floating Pivot Frame Assy	KBW-PF	1	BLANK
17	Hex Bolt Gr8 1-8 x 3.5	91257A959	6	1
18	Flange Hex Bolt 1/2 - 13 x 1	92979A463	1	
19	Hydro Line, Pass	HY-707	2	BLANK
20	Hydro Coupler, Female	FEM-501-8FP-NL	2	BLANK
21	Hydro Coupler, Male	FEM-502-8FP	2	2
22	JIC x ORB Straight	6400-0-08-08	8	BLANK
23	Flange Hex Bolt GR5 5/16 - 18 x 1	92979A253	3	BLANK
24	CAT II Reducer Bushing	21192	2	1.1

Item	Part Name	Part Number	Quantity	Part Description
25	Hex Bolt GR8 1-8 x 5.5	91257A967	2	1
26	Transfer Line	1-640	1	BLANK
27	JIC Bulkhead Union - Locknut 08x08	2700-08-08	2	1
28	Accumulator	A4N0116D656Q	2	BLANK
29	Line Valve to Dist. Block	1-765	2	BLANK
30	Valve Assy	C11258	1	24V
31	JIC x ORB 90 Elbow	6801-NWO-08-08	4	BLANK
32	JIC Tee 04 x 04 x 04	6600-04-04-04	2	1
33	Crossover Line	HY-701-ORB	6	BLANK
34	JIC 08 x JIC 08 Elbow 45	6502-08-08	2	1
35	Hex Bolt GR8 3/4-10 x 3.25"	91257A848	1	BLANK
36	Female 08 JIC x Male 08 Pipe Adaptor	6505-08-08	2	1
37	Female JIC 08 x Female NPT 08 90Elbow	6503-08-08	2	BLANK
38	Hydro Line Cylinder Bridge	HY-209	1	BLANK
39	JIC Extender Swivel 04x06	6504-04-06	2	1
40	JIC x JIC x JIC Tee	6602-08-08-08	2	BLANK
41	CenterLocknut GR2 3/4-10	90040A147-K5	1	BLANK
42	Lockwasher, 5/16	ROC-8076-030	3	BLANK
43	Split Lockwasher, 1/2	ROC-8076-033	6	BLANK
44	JIC Bulkhead 06	2700-LN-06-06	2	
45	Flat Washer 1/2	ROC-8071-033	6	BLANK
46	Hex Bolt 1/2 - 20 x 1	92865A352	6	BLANK
47	Oscillation Link	OLW10	2	1
48	Cylinder Link Center	CLC10	1	1
49	Machine Wire Harness 8 Pin	MSCC521	1	1
50	Plow Wire Harness 8 Pin	PSCC520	1	1

Copyright Kage Innovation All Rights Reserved www.kageinnovation.com (844) 314-KAGE

WEIGHT LBS

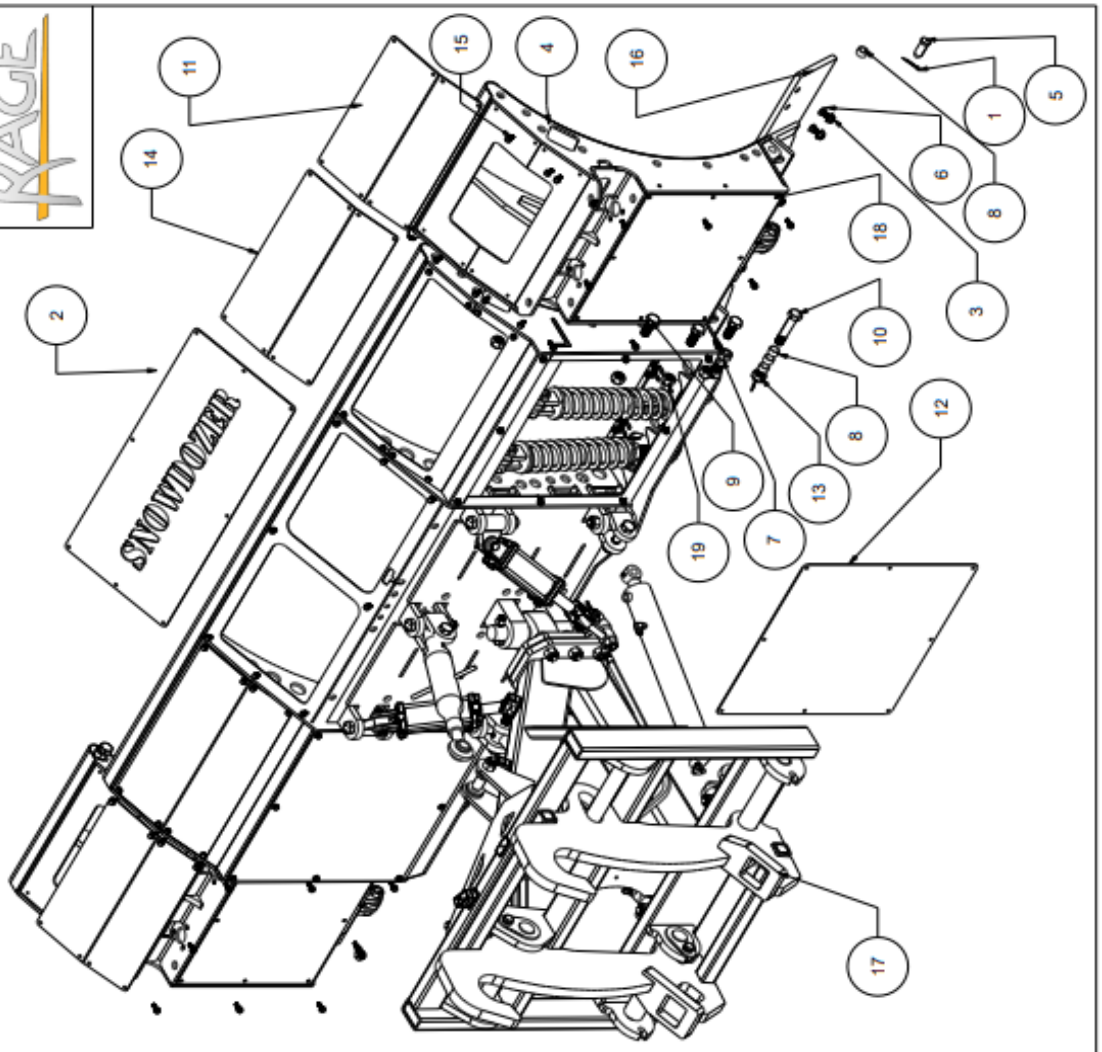

SnowDozer 12
BP12
Version # 1
Version Starting Serial #

Item	Part Name	Part Number	Quantity
1	Cotter Pin 3/16 x 2	98338A516	4
2	Access Panel Aluminum	AP100A	1
3	Flange Locknut 5/8-11	3221357	16
4	Section Moldboard Assembly 2	SM2	2
5	Clevis Pin	98306A677	2
6	Plow Bolt 5/8-11 x 2"	90934A802	17
7	Hex Bolt Gr8 1-8 x 3.5	91257A959	2
8	Stop Bushing	909-4	8
9	HEX BOLT GR8 1-8 x 2.25	92620A954	12
10	Hex Bolt GR8 1-8 x 4.75 w Hole	91257A964-K	2
11	Top Cover 24 Aluminum	TC24	2
12	Back Cover 28 Aluminum	BC28	2
13	Slotted Nut 1-8	97190A040-K8	2
14	Top Cover 28 Aluminum	TC28A	2
15	Flange Hex Bolt 3/8-16 x 1 Self Tapping	93882A657	68
16	Cutting edge 3/4" x 8" x 6'	SBCSD72	2
17	SnowDozer Center Blade Assembly	SDC8(HEG1)	1
18	Back Cover 24 Wing	BC24-W	2
19	Hex Nylock 1-8	95615A320	18

Copyright Kage Innovation All Rights Reserved www.kageinnovation.com (844) 314-KAGE

Weight LBS 4679

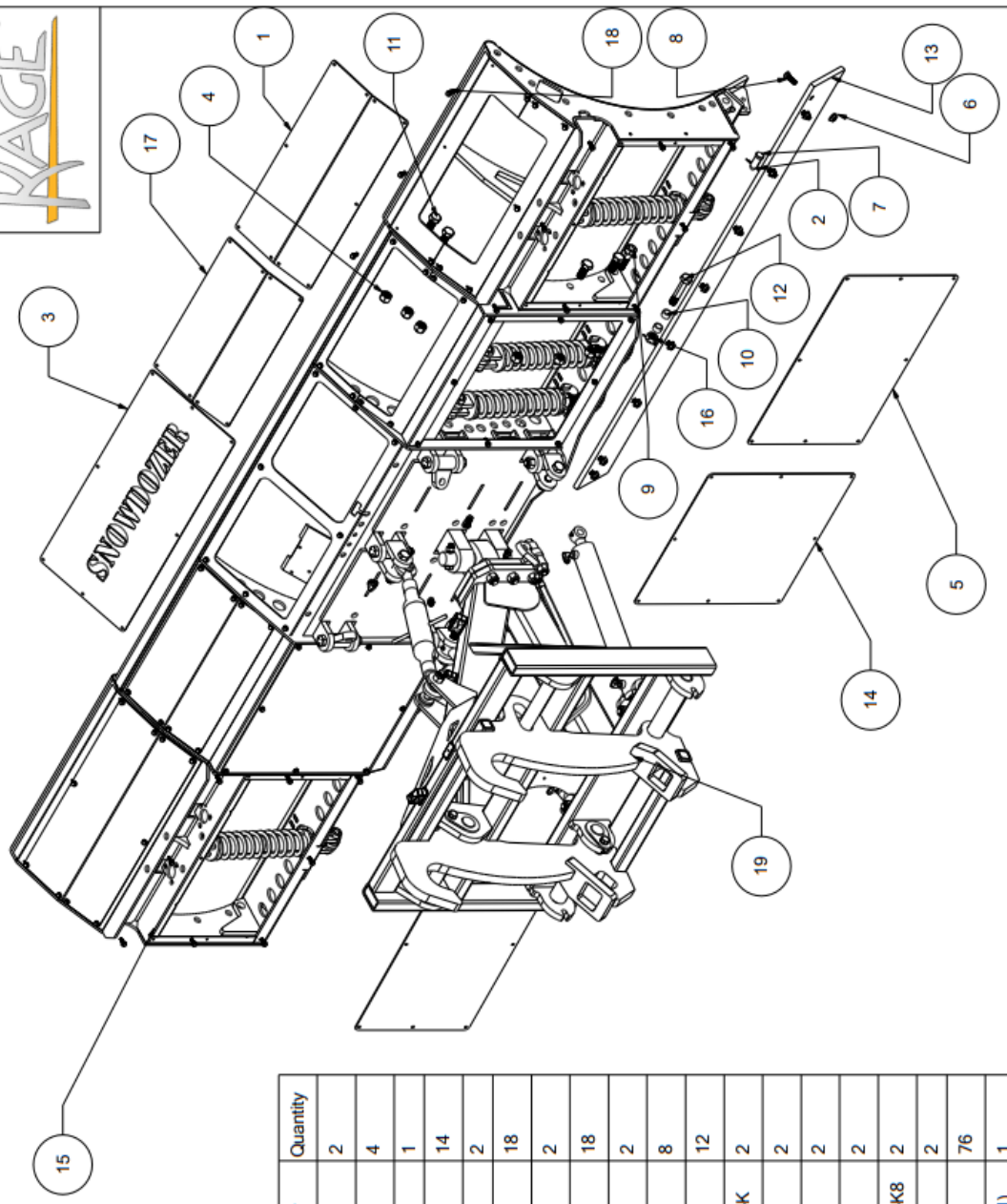

SnowDozer 14
BP14
Version # 1
Version Starting Serial #

Item	Part Name	Part Number	Quantity
1	Top Cover 36	TC36	2
2	Cotter Pin 3/16 x 2	98338A516	4
3	Access Panel	AP100	1
4	Hex Nylock Nut 1-8	95615A320	14
5	Back Cover 36 Wing	BC36-W	2
6	Flange Locknut 5/8-11	3221357	18
7	Clevis Pin	98306A677	2
8	Plow Bolt 5/8-11 x 2"	90934A802	18
9	Hex Bolt Gr8 1-8 x 3.5	91257A959	2
10	Stop Bushing	909-4	8
11	HEX BOLT GR8 1-8 x 2.25	92620A954	12
12	Hex Bolt GR8 1-8 x 4.75 w Hole	91257A964-K	2
13	Cutting edge 3/4" x 8" x 7'	SBCSD84	2
14	Back Cover 28 Aluminum	BC28	2
15	Section Moldboard Wing Assembly 3	SM3	2
16	Slotted Nut 1-8	97190A040-K8	2
17	Top Cover 28 Aluminum	TC28	2
18	Flange Hex Bolt 3/8-16 x 1 Self Tapping	93882A657	76
19	SnowDozer Center Blade Assembly	SDC8(HEG1)	1

Weight LBS 5114

Copyright Kage Innovation All Rights Reserved www.kageinnovation.com (844) 314-KAGE

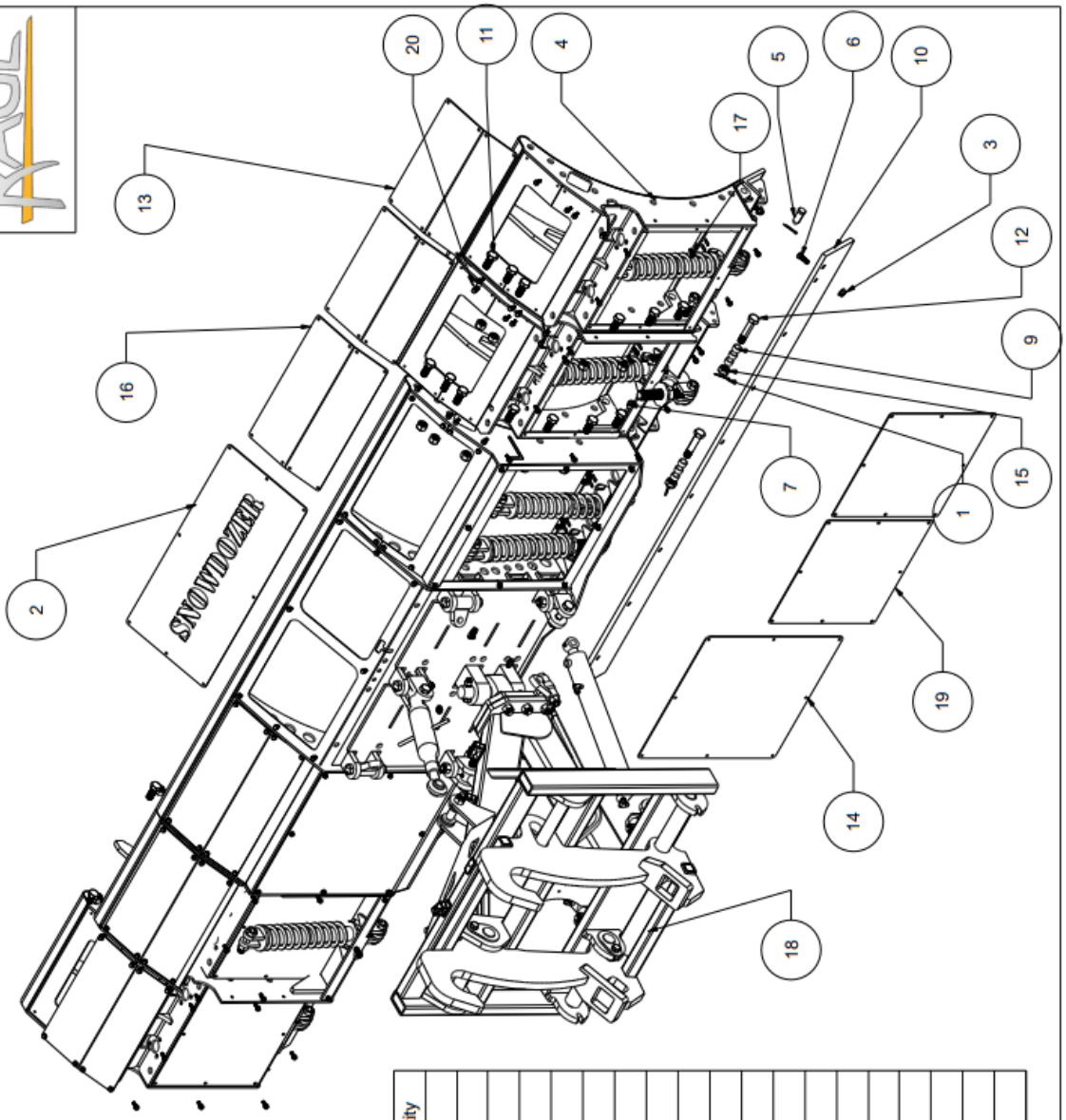

SnowDozer 16
BP16
Version # 1
Version Starting Serial #

Item	Part Name	Part Number	Quantity
1	Cotter Pin 3/16 x 2	98338A516	6
2	Access Panel	AP100	1
3	Flange Locknut 5/8-11	3221357	18
4	Section Moldboard Assembly 2	SM2	4
5	Clevis Pin	98306A677	2
6	Plow Bolt 5/8-11 x 2"	90934A802	18
7	Hex Bolt Gr8 1-8 x 3.5	91257A959	4
9	Stop Bushing	909-4	14
10	Cutting edge 3/4" x 8" x 8'	SBCSD96	2
11	HEX BOLT GR8 1-8 x 2.25	92620A954	28
12	Hex Bolt GR8 1-8 x 4.75 w Hole	91257A964-K	4
13	Top Cover 24 Aluminum	TC24	4
14	Back Cover 28 Aluminum	BC28	2
15	Slotted Nut 1-8	97190A040-K8	4
16	Top Cover 28 Aluminum	TC28	2
17	Flange Hex Bolt 3/8-16 X 1 Self Tapping	93882A657	103
18	SnowDozer Center Blade Assembly	SDC8(HEG1)	1
19	Back Cover 24 Wing	BC24-W	4
20	Hex Nylock 1-8	95615A320	39

Copyright Kage Innovation All Rights Reserved www.kageinnovation.com (844) 314-KAGE

Weight LBS 5527

SnowDozer 18
BP18
Version # 1
Version Starting Serial #

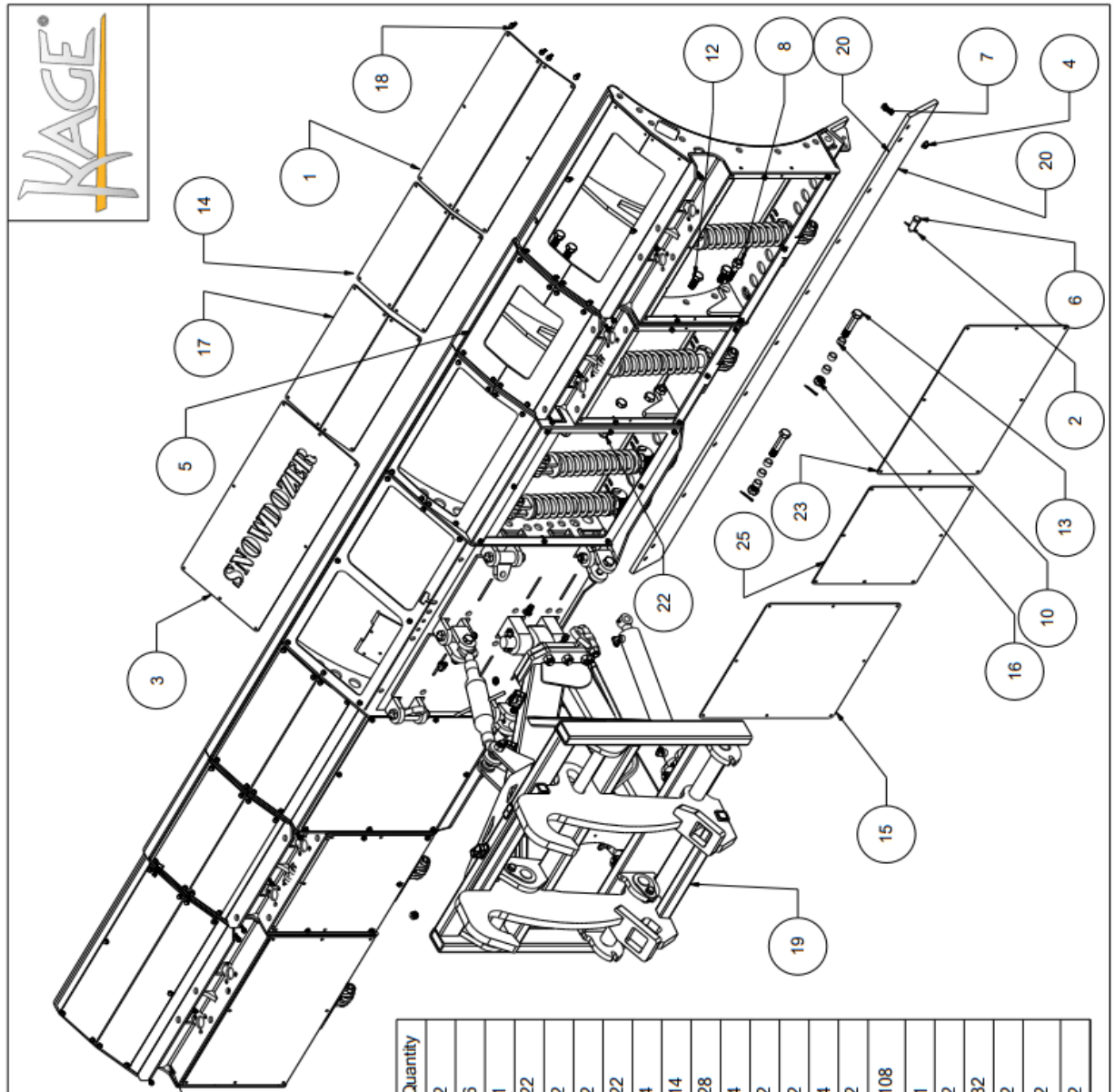

Item	Part Name	Part Number	Quantity
1	Top Cover 36	TC36	2
2	Cotter Pin 3/ 16 x 2	98338A516	6
3	Access Panel	AP100	1
4	Flange Locknut 5/ 8-11	3221357	22
5	Section Moldboard Assembly 2	SM2	2
6	Clevis Pin	98306A677	2
7	Plow Bolt 5/ 8-11 x 2"	90934A802	22
8	Hex Bolt Gr8 1-8 x 3.5	91257A959	4
10	Stop Bushing	909-4	14
12	HEX BOLT GR8 1-8 x 2.25	92620A954	28
13	Hex Bolt GR8 1-8 x 4.75 w Hole	91257A964-K	4
14	Top Cover 24 Aluminum	TC24	2
15	Back Cover 28 Aluminum	BC28	2
16	Slotted Nut 1-8	97190A040-K8	4
17	Top Cover 28 Aluminum	TC28	2
18	Flange Hex Bolt 3/ 8-16 x 1 Self Tapping	93882A657	108
19	SnowDozer Center Blade Assembly	SDC8(HEG1)	1
20	Cutting edge 3/ 4" x 8" x 9'	SBCSD108	2
22	Hex Nylock 1-8	95615A320	32
23	Back Cover 36 Wing	BC36-W	2
24	Section Moldboard Wing Assembly 3	SM3	2
25	Back Cover 24 Wing	BC24-W	2

Weight LBS 5722

Copyright Kage Innovation All Rights Reserved www.kageinnovation.com (844) 314-KAGE

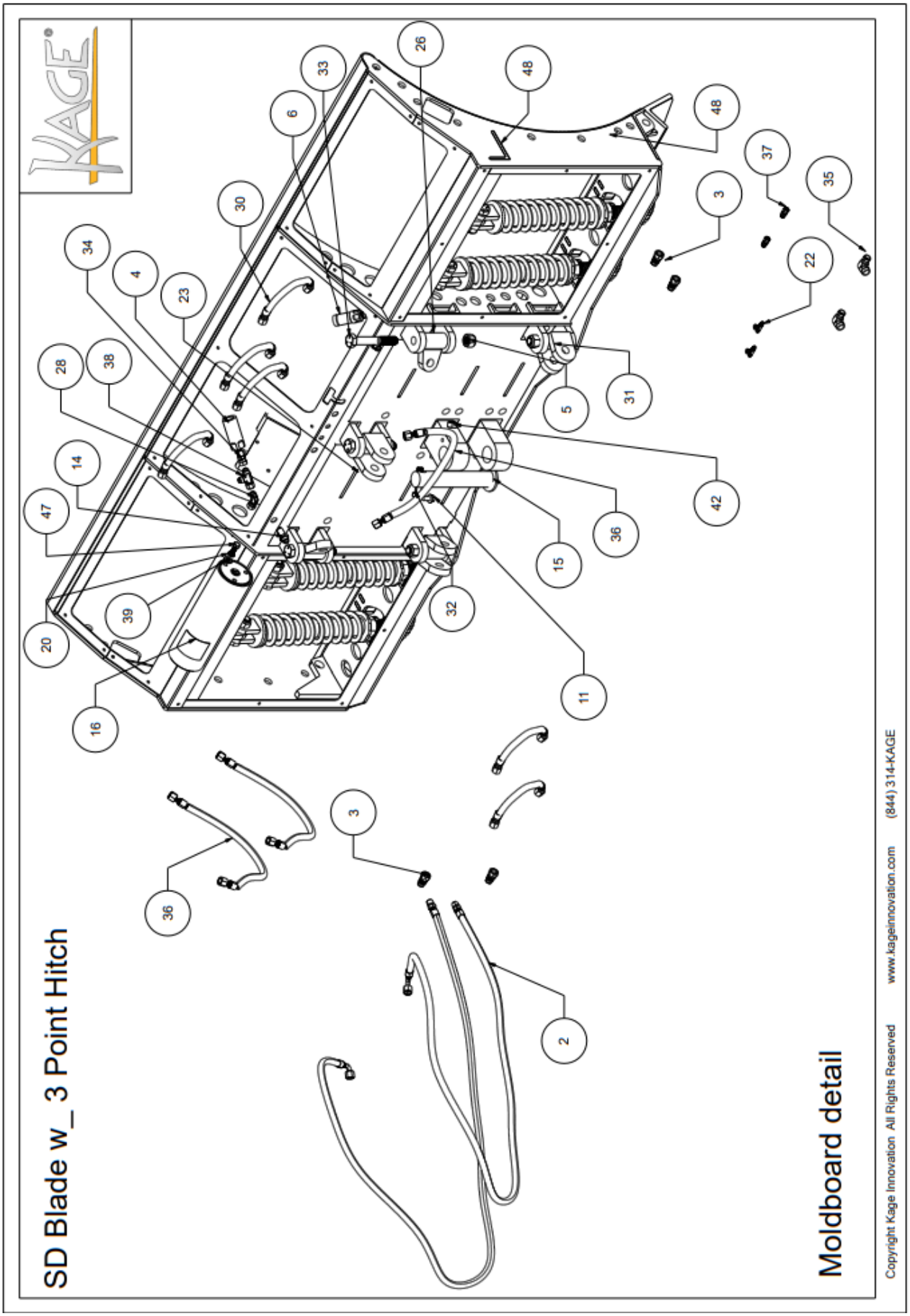
SD Blade w_ 3 Point Hitch
Moldboard detail
Copyright Kage Innovation All Rights Reserved
www.kageinnovation.com
(844) 314-KAGE
KAGE
26
33
48
6
48
37
30
3
35
34
4
22
23
28
38
5
31
14
42
47
36
15
39
32
20
11
16
3
36
2

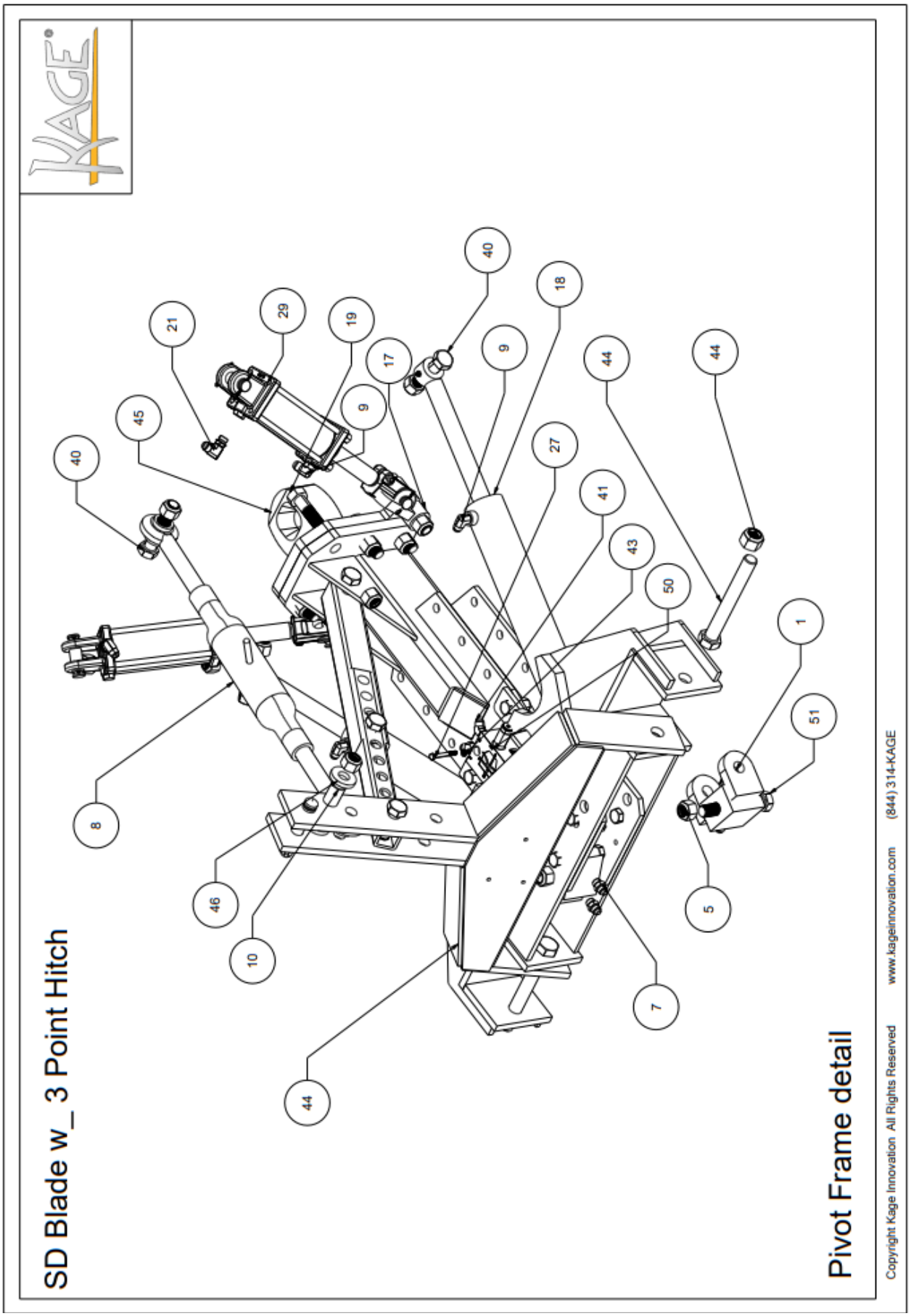
SD Blade w_ 3 Point Hitch
Pivot Frame detail
Copyright Kage Innovation All Rights Reserved
www.kageinnovation.com
(844) 314-KAGE
40
45
21
29
19
17
9
40
18
9
44
44
27
41
43
50
1
51
5
7
44
10
46
8

SD Blade w_ 3 Point Hitch

Item	Part Name	Part Number	Quantity	Item	Part Name	Part Number	Quantity
1	Cylinder Link Rear	CLR10	2	28	JIC 08 x JIC 08 Elbow 45	6502-08-08	2
2	Hydro Line, Pass	HY-707	2	29	Lift Cylinder Short	W300060-S	2
3	Male Ag Coupler	19-400	4	30	Crossover Line	HY-701-ORB	6
4	Hydro Coupler, Female	FEM-501-8FP-NL	1	31	Cylinder Link Front	CLF10	2
5	Hex Nylock Nut 1-8	95615A320	21	32	Hex Bolt GR8 3/4-10 x 3.25"	91257A848	1
6	Hydro Coupler, Male	FEM-502-8FP	1	33	Hex Bolt 1-8 x 6.5	91247A929	7
7	JIC x ORB Straight	6400-0-08-08	4	34	Female 08 JIC x Male 08 Pipe Adaptor	6505-08-08	2
8	Top Link CAT III	22530	1	35	Female JIC 08 x Female NPT 08 90Elbow	6503-08-08	2
9	JIC x Pipe 90 adaptor	2501-08-08	8	36	Hydro Line Cylinder Bridge	HY-209	3
10	CAT II Reducer Bushing	21192	2	37	JIC Extender Swivel 04x06	6504-04-06	2
11	Flange Hex Bolt 1/2 - 13 x 1	92979A463	1	38	JIC x JIC x JIC Tee	6602-08-08-08	2
12	Hex Bolt GR8 1-8 x 5.5	91257A967	2	39	Flat Washer 1/2	ROC-8071-033	6
14	JIC Bulkhead Union - Locknut 08x08	2700-08-08	2	40	Hex Bolt GR8 1-8 x 5	91257A965	3
15	King Pin Weldment	KPW16	1	41	ORB x JIC 45 Elbow	6802-NWO-08-08	2
16	Accumulator	A4N0116D656Q	2	42	CenterLocknut GR2 3/4-10	90040A147-K5	1
17	Oscillation Link	OLW10	2	43	Lockwasher, 5/16	ROC-8076-030	2
18	Hydraulic Cylinder 8320	PMC-8320	2	44	SD 3 Point Pivot Frame Kit	KT-560	1
19	Hex Bolt Gr8 1-8 x 3.5	91257A959	6	45	Pivot Frame Adaptor	PFA4	1
20	Split Lockwasher, 1/2	ROC-8076-033	6	46	1-.375 washer	13W	2
21	Elbow 90 1/2 MJIC x 1/2 MSAE	6801-NWO-08-08	2	47	Hex Bolt 1/2 - 20 x 1	92865A352	6
22	JIC Tee 04 x 04 x 04	6600-04-04-04	2	48	Moldboard Assembly 8	SDM8	1
23	Cylinder Link Center	CLC10	1	50	Crossover Valve 2500	CRV-2500	1
26	Cylinder Link Tilt	CLT10	2	51	Hex Bolt GR8 1-8 x 6.5	91257A970	2
27	Hex Bolt GR5 5/16-18 x 2.5	91247A593	2				

Copyright Kage Innovation All Rights Reserved www.kageinnovation.com (844) 314-KAGE

Section Moldboard Assembly 2
SM2

Version#
Version Starting Serial #

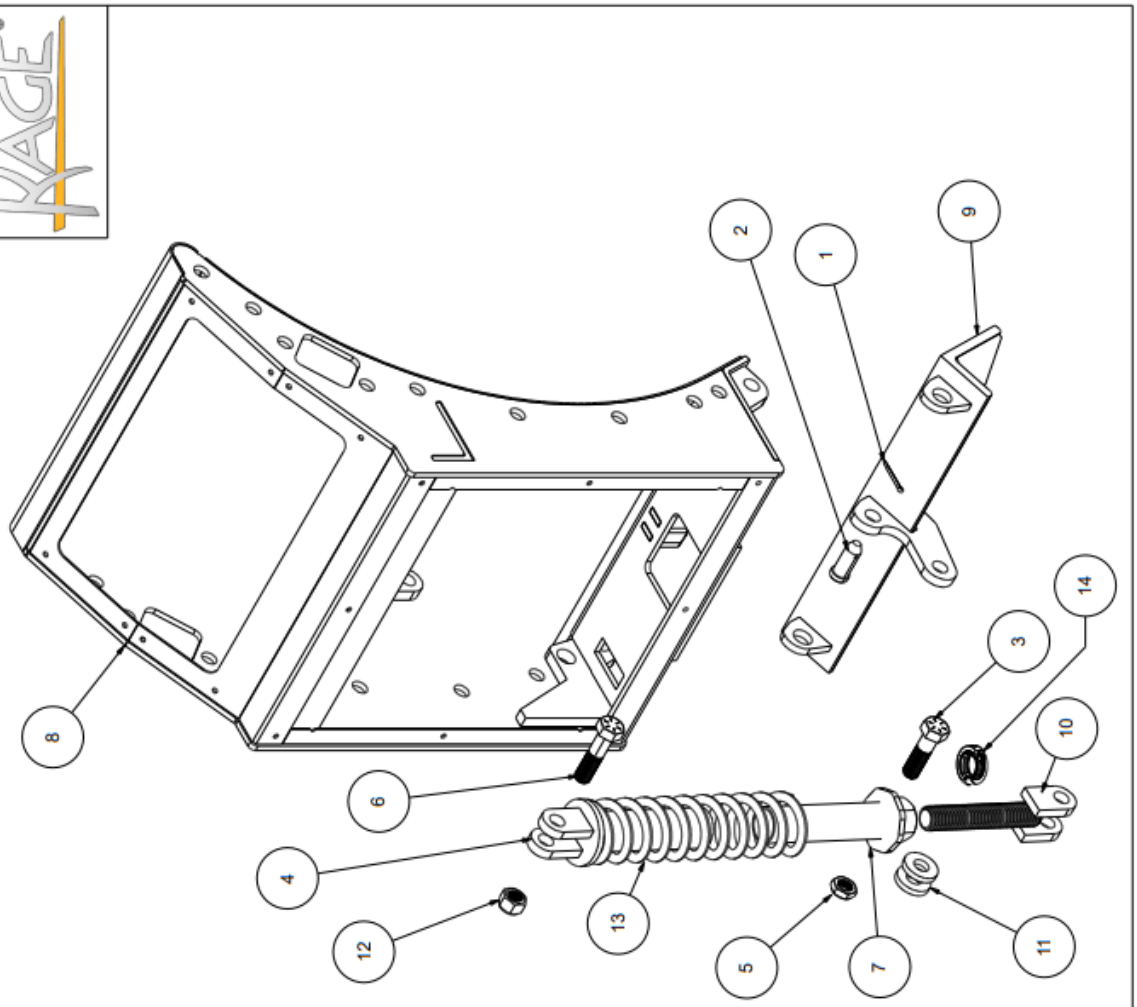

Spring should be compressed to 15.5”

Item	Part Name	Part Number	Quantity	Alibre Part Revision
1	Cotter Pin 3/16 x 2	98338A516	1	BLANK
2	Clevis Pin	98306A677	1	52
3	Hex Bolt Gr8 1-8 x 3.5	91257A959	1	1
4	Spring Top 16	ST16-8	1	3
5	1-8 Thin Hex Nylock Nut Gr5	91342A260	1	BLANK
6	Hex Bolt Gr8 1-8 x 4	91257A961	1	1
7	Spring Bottom 16	SB16-8	1	3
8	Section Moldboard Weldment 2	SMW2	1	
9	Base Angle 24 Weldment	BA24W	1	1
10	Trip Spring Rod Weldment	TSRW	1	3
11	1-.375 washer	13W	2	46
12	Hex Nylock 1-8	95615A320	1	BLANK
13	SS Coil Spring	5890032	1	2
14	Two-Piece Clamping Acme Lead Screw Collar	2207N18	1	1

WEIGHT LBS

Copyright Kage Innovation All Rights Reserved www.kageinnovation.com (844) 314-KAGE

Section Moldboard Assembly 3
SM3

Version#
Version Starting Serial #

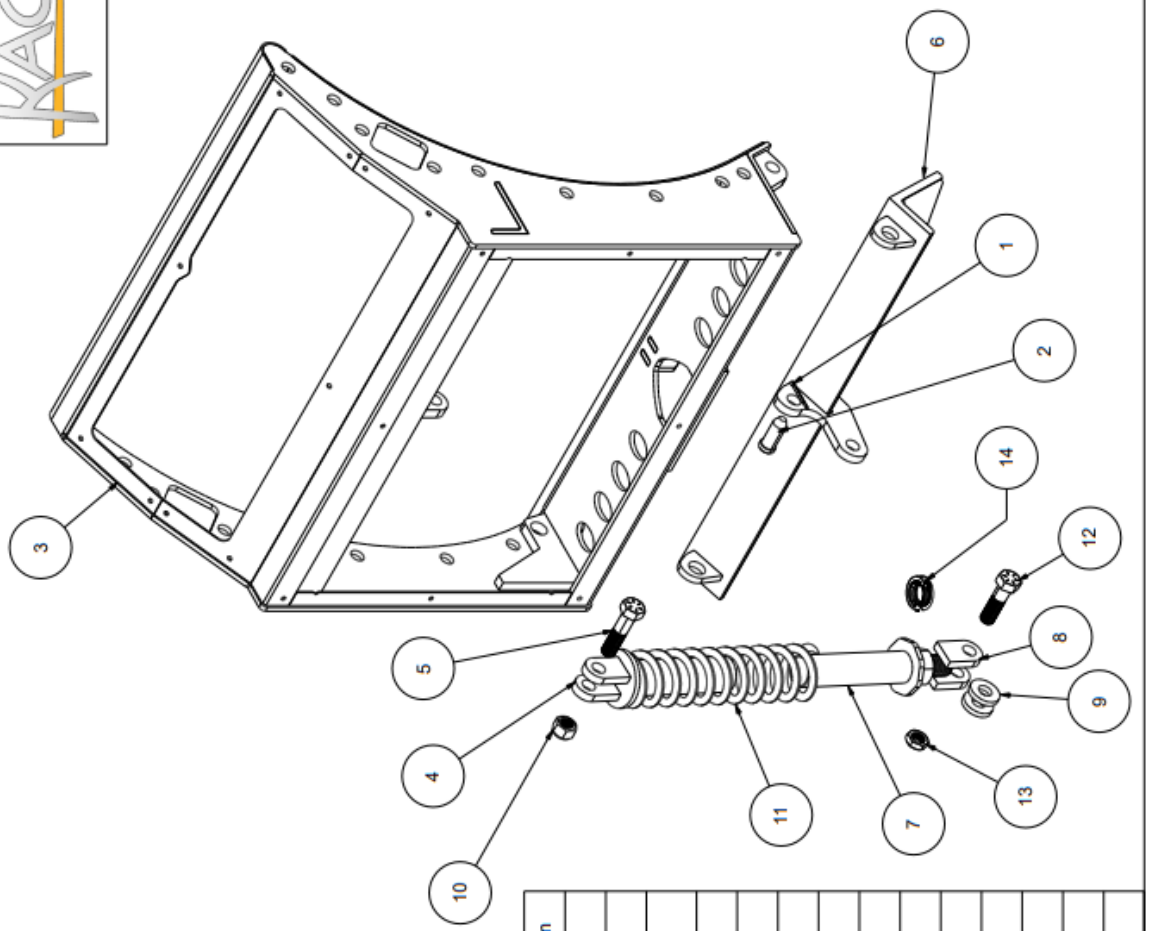

Spring should be compressed to 15.5”

Item	Part Name	Part Number	Quantity	Allbre Part Revision
1	Cotter Pin 3/16 x 2	98338A516	1	BLANK
2	Clevis Pin	98306A677	1	52
3	Section Moldboard Weldment 3	SMW3	1	1
4	Spring Top 16	ST16-8	1	3
5	Hex Bolt Gr8 1-8 x 4	91257A961	1	1
6	Base Angle 36 Weldment	BA36W	1	1
7	Spring Bottom 16	SB16-8	1	3
8	Trip Spring Rod Weldment	TSRW	1	3
9	1-.375 washer	13W	2	46
10	Hex Nylock 1-8	95615A320	1	BLANK
11	SS Coil Spring	5890032	1	2
12	Hex Bolt Gr8 1-8 x 3.5	91257A959	1	1
13	1-8 Thin Hex Nylock Nut Gr5	91342A260	1	BLANK
14	Two-Piece Clamping Acme Lead Screw Collar	2207N18	1	1

WEIGHT LBS

Copyright Kage Innovation All Rights Reserved www.kageinnovation.com (844) 314-KAGE

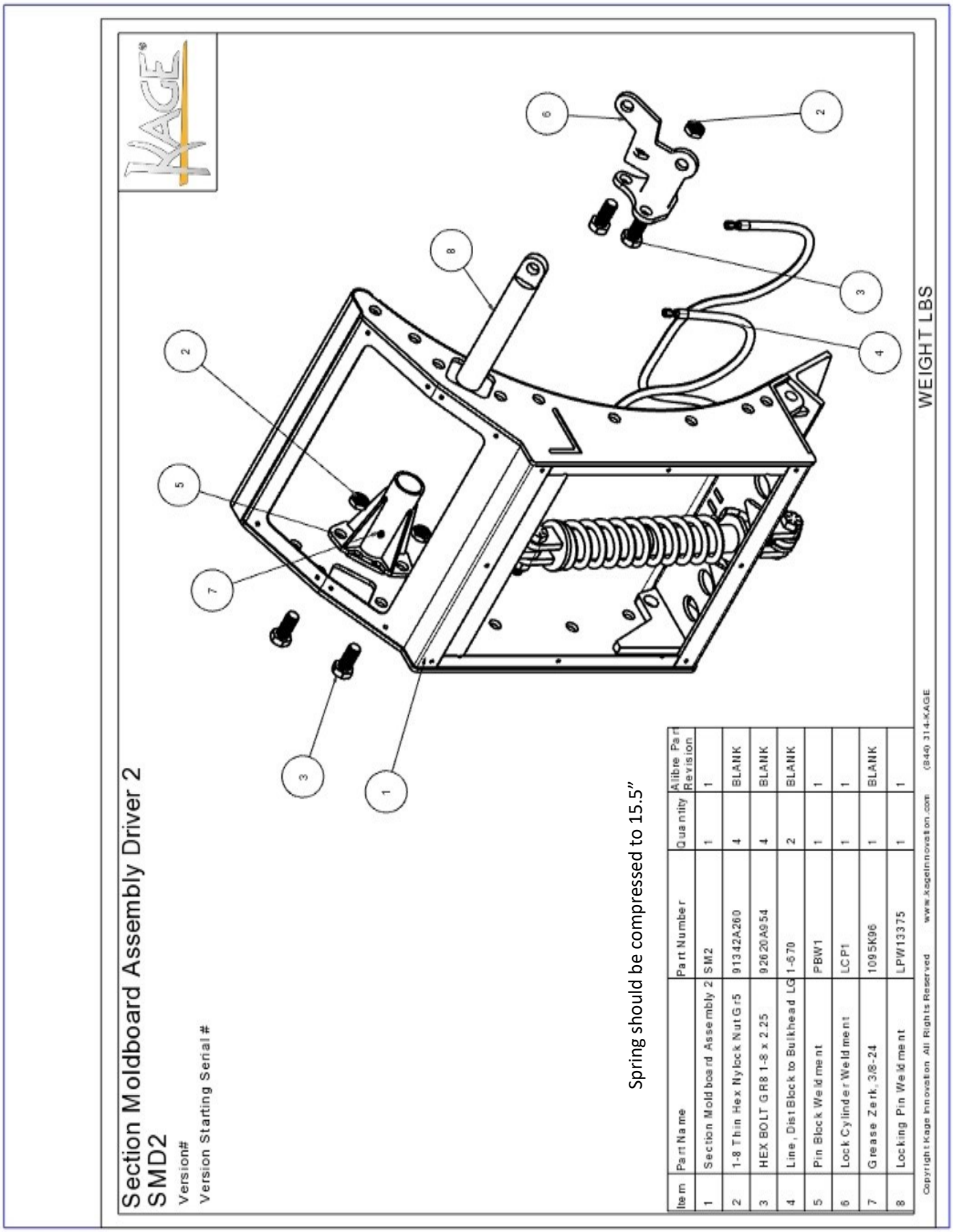

Item	Part Name	Part Number	Quantity	Alibre Part Revision
1	Section Moldboard Assembly 2	SM2	1	1
2	1-8 Thin Hex Nylock Nut Gr5	91342A260	4	BLANK
3	HEX BOLT GR8 1-8 x 2.25	92620A954	4	BLANK
4	Line, Dist Block to Bulkhead LG	1-670	2	BLANK
5	Pin Block Weldment	PBW1	1	1
6	Lock Cylinder Weldment	LCP1	1	1
7	Grease Zerk, 3/8-24	1095K96	1	BLANK
8	Locking Pin Weldment	LPW13375	1	1

SnowKage 16
BPSK16

Version#
Version Starting Serial #

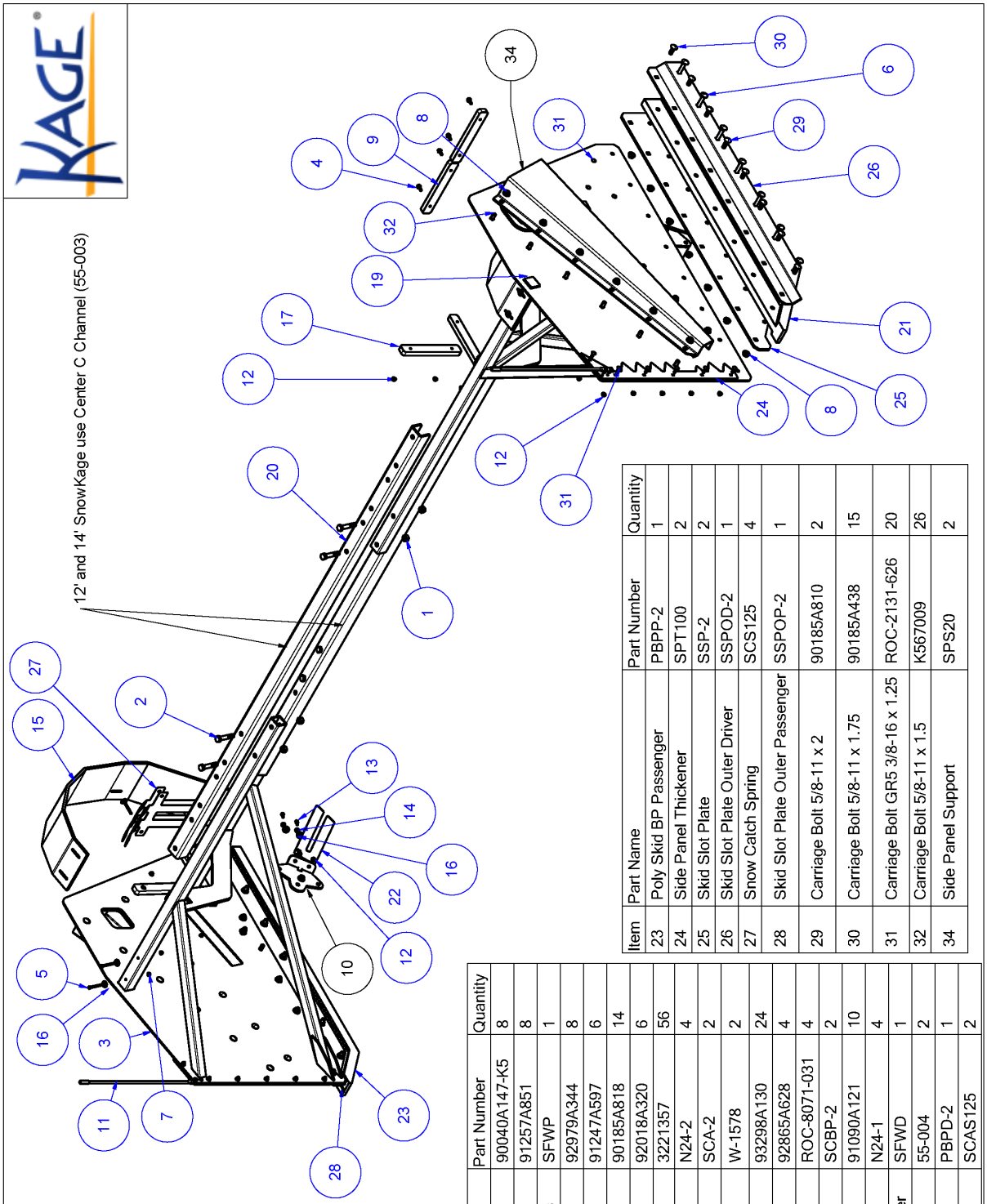

Item	Part Name	Part Number	Quantity
1	CenterLocknut GR2 3/4-10	90040A147-K5	8
2	Hex Bolt GR8 3/4-10 x 4"	91257A851	8
3	Side Frame Weldment Pass	SFWP	1
4	Flange Hex Bolt 3/8 - 16 x 1	92979A344	8
5	Hex Bolt 5/16-18 x 3.5"	91247A597	6
6	Carriage Bolt 5/8-11 x 3	90185A818	14
7	Flange Locknut 5/16-18	92018A320	6
8	Flange Locknut 5/8-11	3221357	56
9	Isolator	N24-2	4
10	Snow Catch Angle	SCA-2	2
11	Plow Guide	W-1578	2
12	Flange Locknut, 3_8 -16	93298A130	24
13	Hex Bolt GR5 3/8-16 x 1.5	92865A628	4
14	Flat Washer 3/8	ROC-8071-031	4
15	Snow Catch BP	SCBP-2	2
16	Fender Washer, 3/8	91090A121	10
17	Isolator Black	N24-1	4
19	Side Frame Weldment Driver	SFWD	1
20	Center C Channel Long	55-004	2
21	Poly Skid BP Driver	PBPD-2	1
22	Snow Catch Angle Spring	SCAS125	2

Item	Part Name	Part Number	Quantity
23	Poly Skid BP Passenger	PBPP-2	1
24	Side Panel Thickener	SPT100	2
25	Skid Slot Plate	SSP-2	2
26	Skid Slot Plate Outer Driver	SSPOD-2	1
27	Snow Catch Spring	SCS125	4
28	Skid Slot Plate Outer Passenger	SSPOP-2	1
29	Carriage Bolt 5/8-11 x 2	90185A810	2
30	Carriage Bolt 5/8-11 x 1.75	90185A438	15
31	Carriage Bolt GR5 3/8-16 x 1.25	ROC-2131-626	20
32	Carriage Bolt 5/8-11 x 1.5	K567009	26
34	Side Panel Support	SPS20	2

WEIGHT LBS

Copyright Kage Innovation All Rights Reserved www.kageinnovation.com (844) 314-KAGE

2 IN 1 Hydraulic Schematic

Revision 2024.7.15

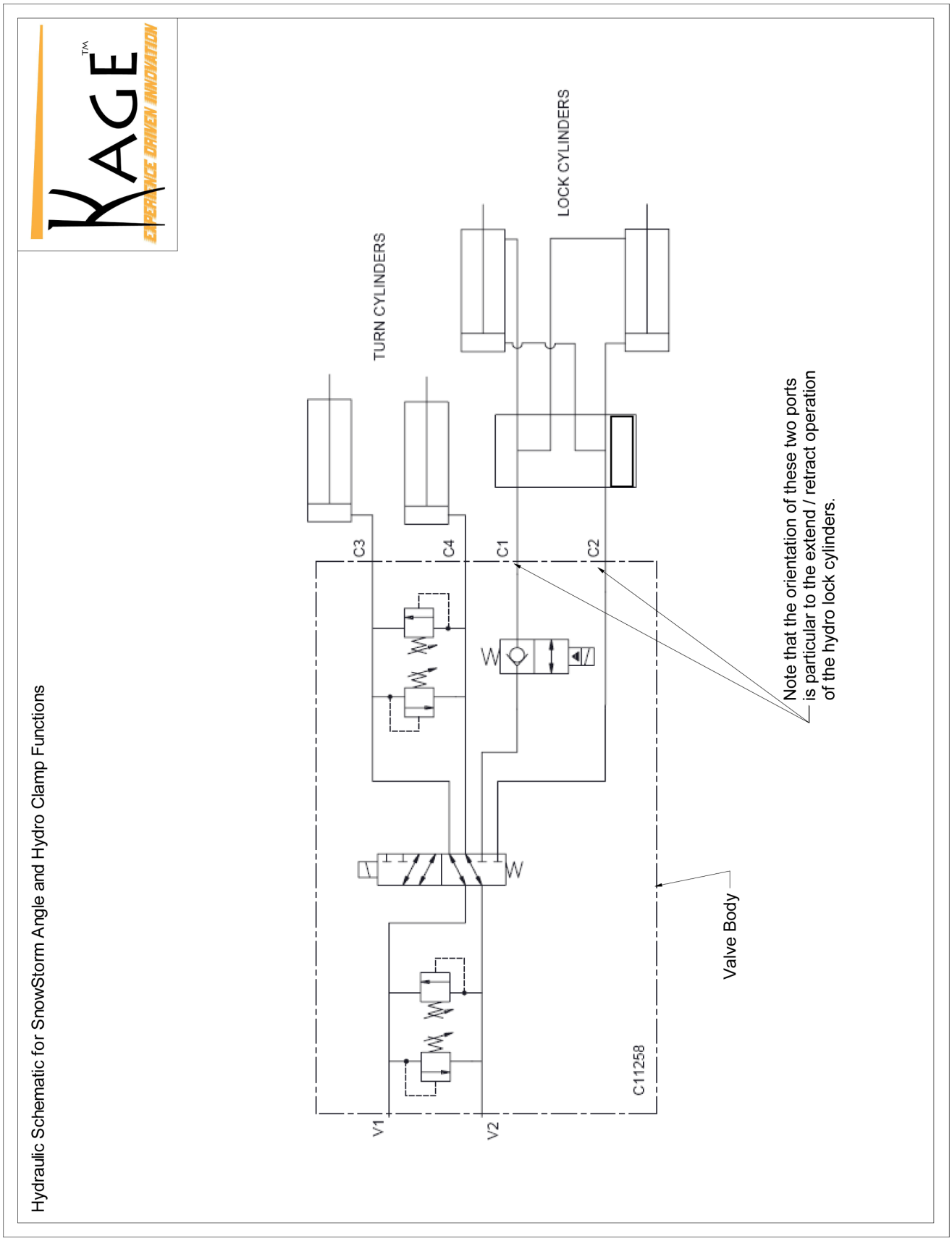

Kage Limited Warranty

Kage Innovation will repair or, at the option of Kage Innovation, replace those parts which prove defective due to material or workmanship under normal use for a period of two (2) years from the date of retail sale or date of invoice from Kage Innovation, whichever is later. Expendable items, such as rubber, or polyurethane are excluded from this warranty.

Kage Innovation warrants that the products manufactured by us to be in accordance with our published specifications or those specifications agreed to by us in writing at the time of sale. The obligation of Kage Innovation is expressly limited to repairing or replacing, at its option, any product not meeting such specifications within the warranty period.

LIMITATIONS OF WARRANTY AND DAMAGES

KAGE INNOVATION MAKES NO OTHER WARRANTY, EXPRESSED OR IMPLIED, AND MAKES NO WARRANTY OF MERCHANTABILITY OR OF FITNESS FOR ANY PARTICULAR PURPOSE. THERE ARE NO WARRANTIES WHICH EXTEND BEYOND THE FACE HEREOF.

IN NO EVENT SHALL KAGE INNOVATION, BE HELD LIABLE FOR SPECIAL, INCIDENTAL OR CONSEQUENTIAL DAMAGES OR FOR DAMAGES RESULTING FROM MISAPPLICATION, ABUSE, MISUSE, ACTS OF GOD, UNAUTHORIZED ALTERATION OF THE KAGE INNOVATION PRODUCT, OR SUBSTITUTION OF PARTS NOT AUTHORIZED IN WRITING BY KAGE INNOVATION.

To obtain service under this warranty the consumer must return the defective Kage Innovation product to Kage Innovation directly, the dealer from which the product was purchased or to any authorized Kage Innovation dealer, transportation and freight charges prepaid. Only Kage Innovation dealers are authorized to perform the obligations under this warranty with pre-authorization from Kage Innovation.

No person is authorized to alter or amend this warranty or to create any warranty other than that set forth herein without the expressed written consent of Kage Innovation.

Kage Innovation reserves the right to make improvement changes on any of our products without prior notice.

Revision Comments

Date	Name	Description
11-29-2023	Mike	Updated snowcatch angle and side support for the SnowKAGE box
11-29-2023	Mike	Added 2 missing 5/8 carriage and locknuts to SnowKage BOM
5-7-2024	Josh	Added 3-point version drawings and BOM
5-14-2024	Mike	Added spec sheet for 2 in 1 system and spec for Wing
7-15-2024	Josh	Created new manual
10-10-2024	Mike	Added instructions for mounting wing harness & 2024 fall updates
11/8/2024	Mike	Added Electrical Schematic and updated Wing Hydro Schematic & Break-down
1/3/2025	Josh	Added locking collars to SDM8 breakdown
1/8/2025	Josh	Added Hinge Block description
1/16/2025	Josh	Updated SDW60 breakdown
2/28/2025	Josh	Added spring compression measurements
4/4/2025	Josh	Updated WHK-SD breakdown
7/18/2025	Josh	Split SD manual into separate WING and 2-in-1 manuals