SnowFire System™

Owners Manual

REV: 2024.6.7

KAGE® Innovation LLC 502 Simmon Drive Osceola, WI 54020 | (844) 314 - Kage | www.kageinnovation.com

Kage Limited Warranty

Kage Innovation will repair or, at the option of Kage Innovation, replace those parts which prove defective due to material or workmanship under normal use for a period of two (2) years from the date of retail sale or date of invoice from Kage Innovation, whichever is later. Expendable items, such as rubber, or polyurethane are excluded from this warranty.

Kage Innovation warrants that the products manufactured by us to be in accordance with our published specifications or those specifications agreed to by us in writing at the time of sale. The obligation of Kage Innovation is expressly limited to repairing or replacing, at its option, any product not meeting such specifications within the warranty period.

LIMITATIONS OF WARRANTY AND DAMAGES

KAGE INNOVATION MAKES NO OTHER WARRANTY, EXPRESSED OR IMPLIED, AND MAKES NO WARRANTY OF MERCHANTABILITY OR OF FITNESS FOR ANY PARTICULAR PURPOSE. THERE ARE NO WARRANTIES WHICH EXTEND BEYOND THE FACE HEREOF.

IN NO EVENT SHALL KAGE INNOVATION, BE HELD LIABLE FOR SPECIAL, INCIDENTAL OR CONSEQUENTIAL DAMAGES OR FOR DAMAGES RESULTING FROM MISAPPLICATION, ABUSE, MISUSE, ACTS OF GOD, UNAUTHORIZED ALTERATION OF THE KAGE INNOVATION PRODUCT, OR SUBSTITUTION OF PARTS NOT AUTHORIZED IN WRITING BY KAGE INNOVATION.

To obtain service under this warranty the consumer must return the defective Kage Innovation product to Kage Innovation directly, the dealer from which the product was purchased or to any authorized Kage Innovation dealer, transportation and freight charges prepaid. Only Kage Innovation dealers are authorized to perform the obligations under this warranty with pre-authorization from Kage Innovation.

No person is authorized to alter or amend this warranty or to create any warranty other than that set forth herein without the expressed written consent of Kage Innovation.

Kage Innovation reserves the right to make improvement changes on any of our products without prior notice.

Important Notice for Bobcat® Users

Please note that for Bobcat brand machines the hoses should be routed through the upper driver side hose clamp, with the hoses elbows angled as shown. If a second option is needed route hoses through the passenger hose clamp shown in the second image. Once the hose routing is complete, adjust the hose length between the plow and the machine to be taught with the plow tipped all the way forward.

Hose Adjustments for Bobcat

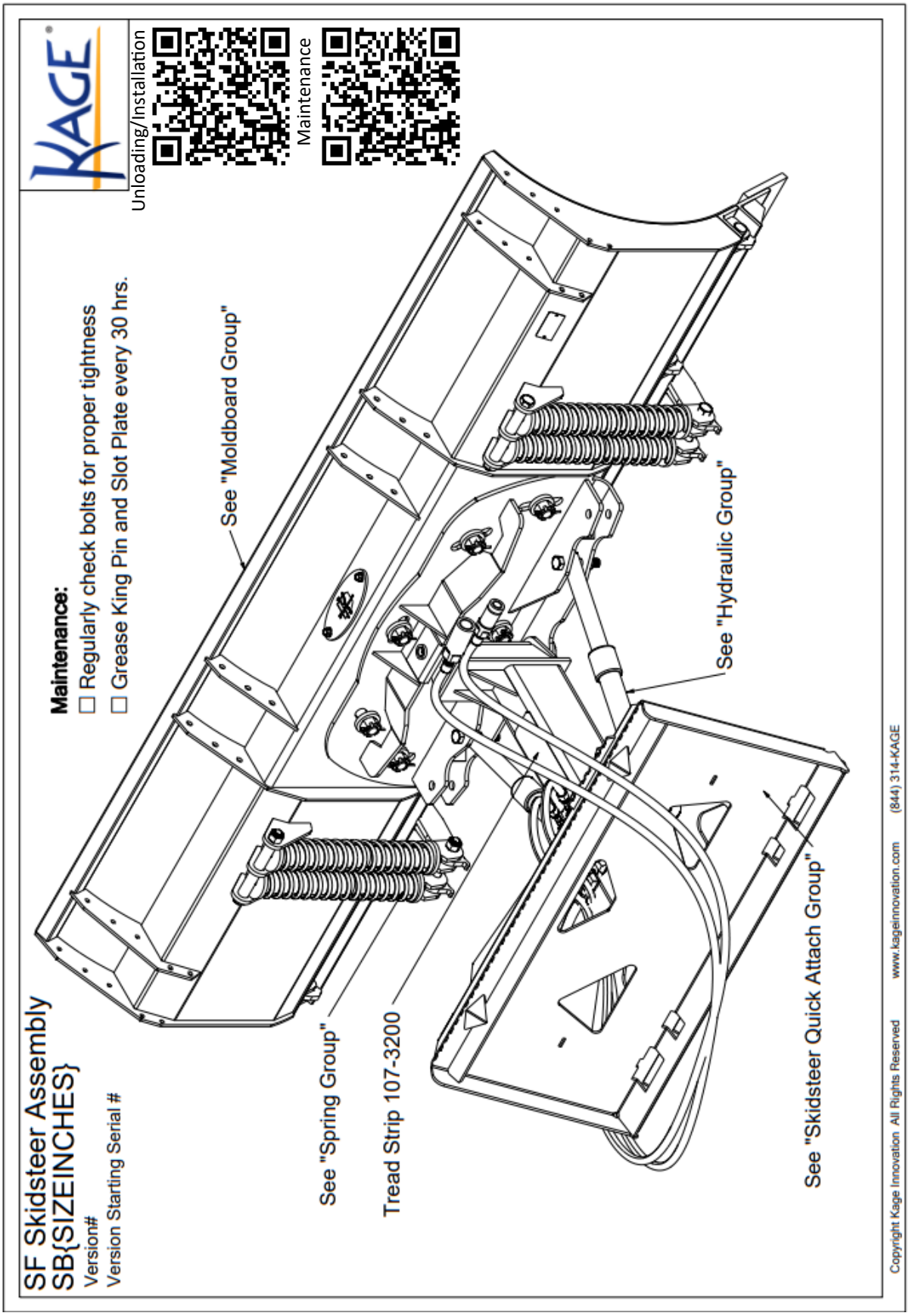
SF Skidsteer Assembly
SB{SIZEINCHES}
Version#
Version Starting Serial #
Maintenance:
☐ Regularly check bolts for proper tightness
☐ Grease King Pin and Slot Plate every 30 hrs.
Unloading/Installation
Maintenance
See "Moldboard Group"
See "Spring Group"
Tread Strip 107-3200
See "Hydraulic Group"
See "Skidsteer Quick Attach Group"
Copyright Kage Innovation All Rights Reserved
www.kageinnovation.com
(844) 314-KAGE

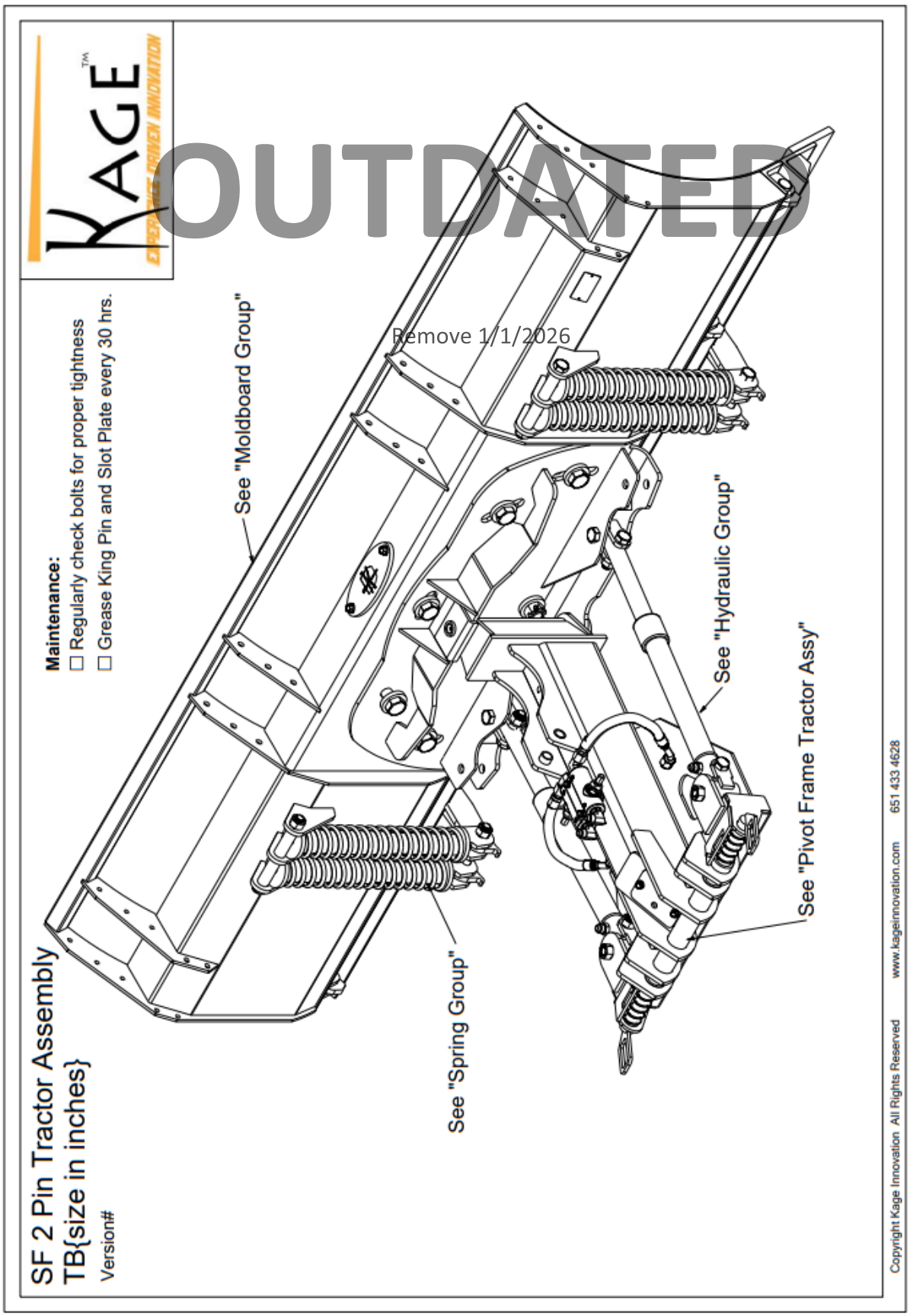
KAGE™
EXPERIENCE DRIVEN INNOVATION
OUTDATED
Remove 1/1/2026
SF 2 Pin Tractor Assembly
TB{size in inches}
Version#
Maintenance:
☐ Regularly check bolts for proper tightness
☐ Grease King Pin and Slot Plate every 30 hrs.
See "Moldboard Group"
See "Spring Group"
See "Hydraulic Group"
See "Pivot Frame Tractor Assy"
Copyright Kage Innovation All Rights Reserved
www.kageinnovation.com
651 433 4628

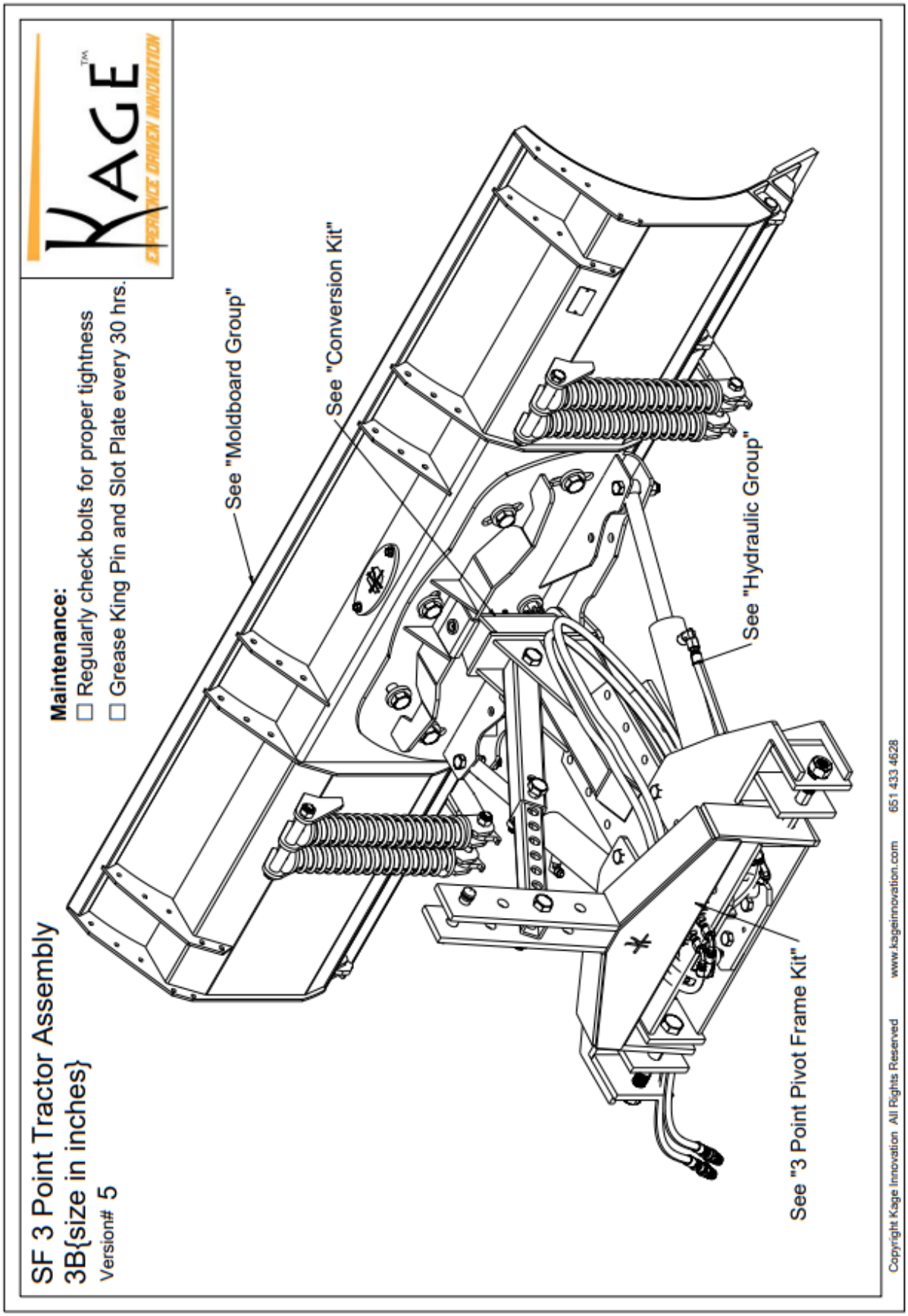
SF 3 Point Tractor Assembly
3B{size in inches}
Version# 5
Maintenance:
☐ Regularly check bolts for proper tightness
☐ Grease King Pin and Slot Plate every 30 hrs.
KAGE
EXPERIENCE DRIVEN INNOVATION
See "Moldboard Group"
See "Conversion Kit"
See "Hydraulic Group"
See "3 Point Pivot Frame Kit"
Copyright Kage Innovation All Rights Reserved
www.kageinnovation.com
651 433 4628

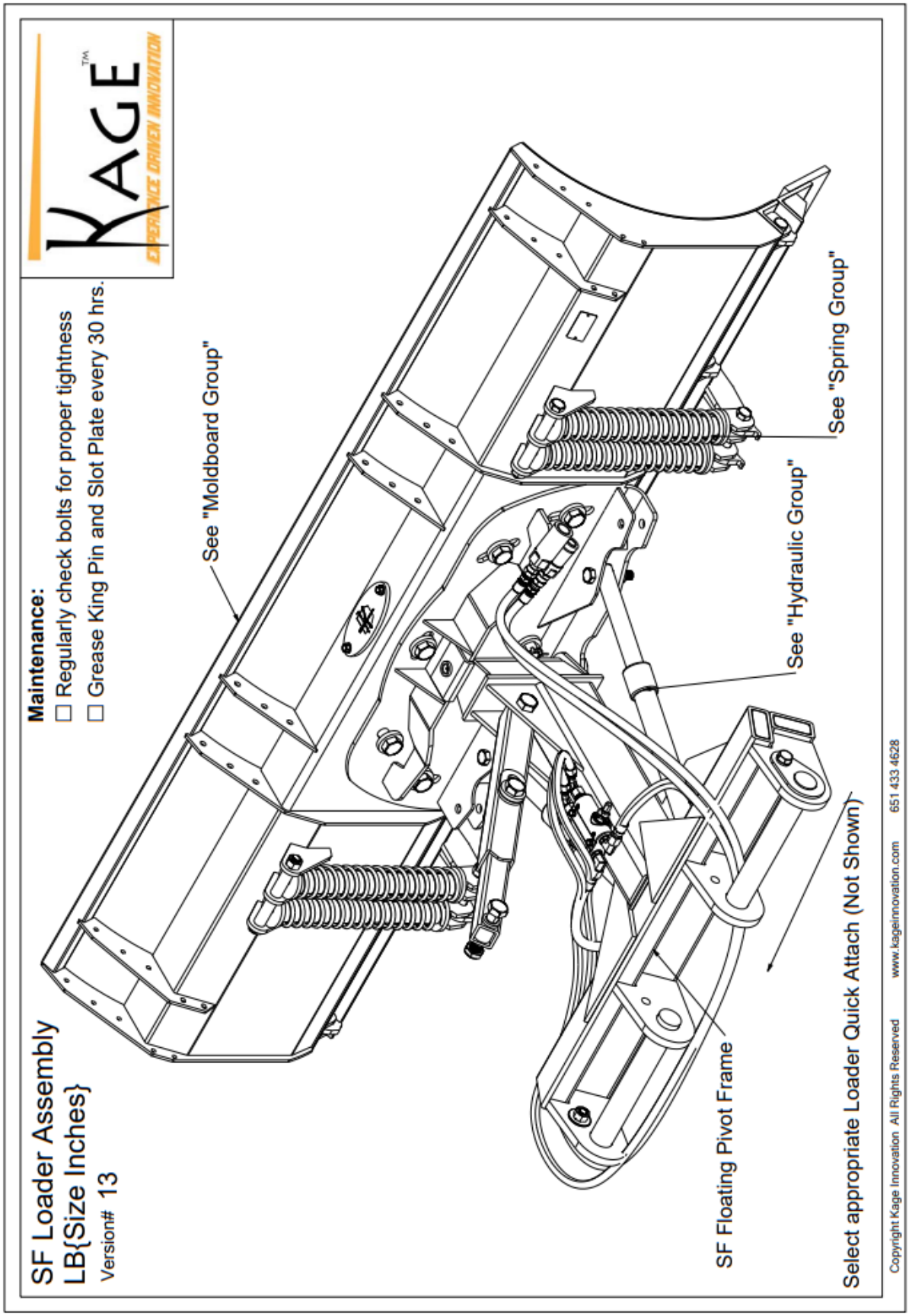
KAGE
EXPERIENCE DRIVEN INNOVATION
Maintenance:
☐ Regularly check bolts for proper tightness
☐ Grease King Pin and Slot Plate every 30 hrs.
SF Loader Assembly
LB{Size Inches}
Version# 13
See "Moldboard Group"
See "Spring Group"
See "Hydraulic Group"
SF Floating Pivot Frame
Select appropriate Loader Quick Attach (Not Shown)
Copyright Kage Innovation All Rights Reserved
www.kageinnovation.com
651 433 4628

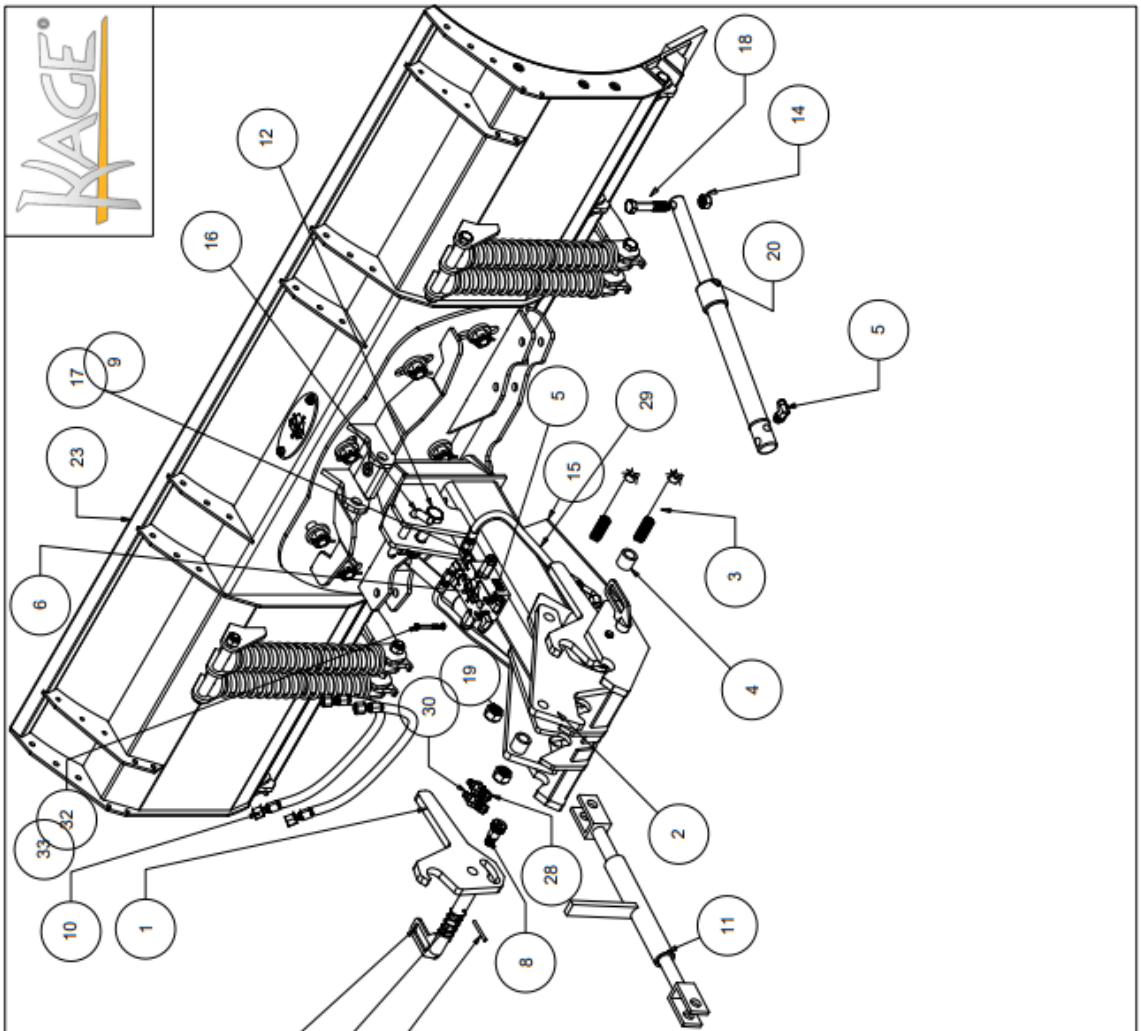

TB (Tractor Blade) 6, 8, 9, 10 Foot

Item	Part Name	Part Number	QTY
1	SF Tractor Latch	333-4875	2
2	Tractor Clamp Plate	333-5567	2
3	Hex Bolt GR8 1-8 x 8	91257A977	2
4	Tractor Pivot Bushing	333-4963	2
5	Elbow 90 1/2 MJIC x 1/2 MSAE	6801-NWO-08-08	4
6	Crossover Valve 3000	CRV-3000	1
7	Tension Pin	95755A429	2
8	Shoulder Bolt 3/4-10 x 1 x 2	91259A130	2
9	JIC x ORB Restrictor	6400R-08-08-.062	2
10	Hydro Line Cylinder Bridge	HY-209	2
11	Ratchet Jack	22590	1
12	Hex Bolt GR8 1-8 x 5	91257A965	1
13	Spring, Pin	3135	2
14	CenterLocknut GR2 3/4-10	90040A147-K5	4
15	SF Tractor Pivot Frame Weldment	PF-101-TRACTOR	1
16	Hitch Pin	BP-075-0500	1
17	JIC 90 Elbow 08 x 08	6500-08-08	2
18	Hex Bolt GR8 3/4-10 x 4"	91257A851	4
19	Hex Nylock 1-8	95615A320	3
20	SF Hydro Cylinder	BK-0489-ORB-NITRO	2
22	SF Moldboard Assembly 6	SFM6	
23	SF Moldboard Assembly 8	SFM8	
24	SF Moldboard Assembly 9	SFM9	
25	SF Moldboard Assembly 10	SFM10	
27	SF Tractor Pin	333-4500	2
28	Male Ag Coupler	19-400	2
29	Crossover Line	HY-701-ORB	2
30	JIC x Pipe Adapter 08x08	2404-08-08	2
32	Hex Bolt GR5 5/16-18 x 2.5	91247A593	2
33	Lockwasher, 5/16	ROC-8076-030	2

Copyright Kage Innovation All Rights Reserved www.kageinnovation.com (844) 314-KAGE

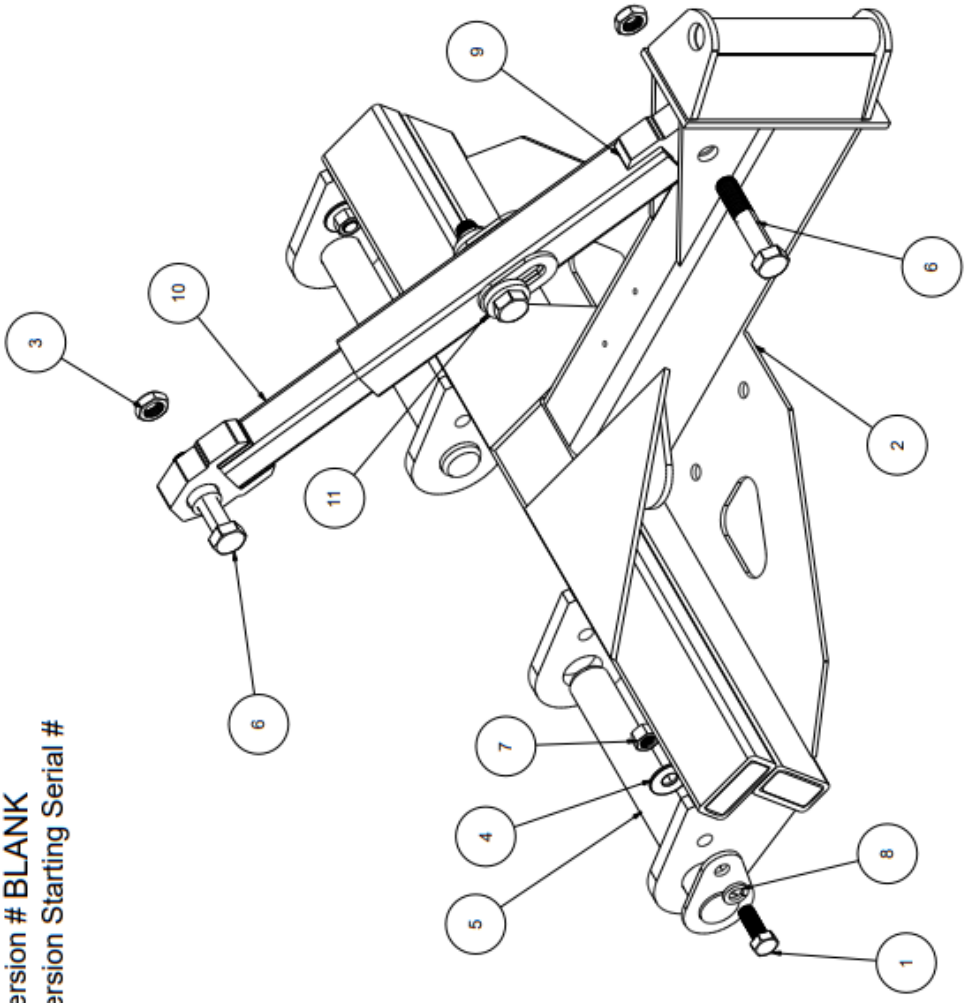

Floating Pivot Frame Assy SF
PF-101-LOADERASSY
Version # BLANK
Version Starting Serial #

Item	Part Name	Part Number	Quantity
1	Hex Bolt GR5 3/ 4-10 x 2	92865A843	2
2	Pivot Frame loaders SF	PF-101-LOADER	1
3	1-8 Thin Hex Nylock Nut Gr5	91342A260	3
4	3/ 4" Flat Washer	90108A036	2
5	Float Pin	67-001	2
6	Hex Bolt GR8 1-8 x 5	91257A965	3
7	CenterLocknut GR2 3/ 4-10	90040A147-K5	2
8	Lockwasher 3/ 4	91102A036	2
9	Slotted Female Weldment	126-1	1
10	Male Tube Weldment	128-1	1
11	1-.375 washer	13W	2

Weight LBS 265.16

Copyright Kage Innovation All Rights Reserved www.kageinnovation.com (844) 314-KAGE

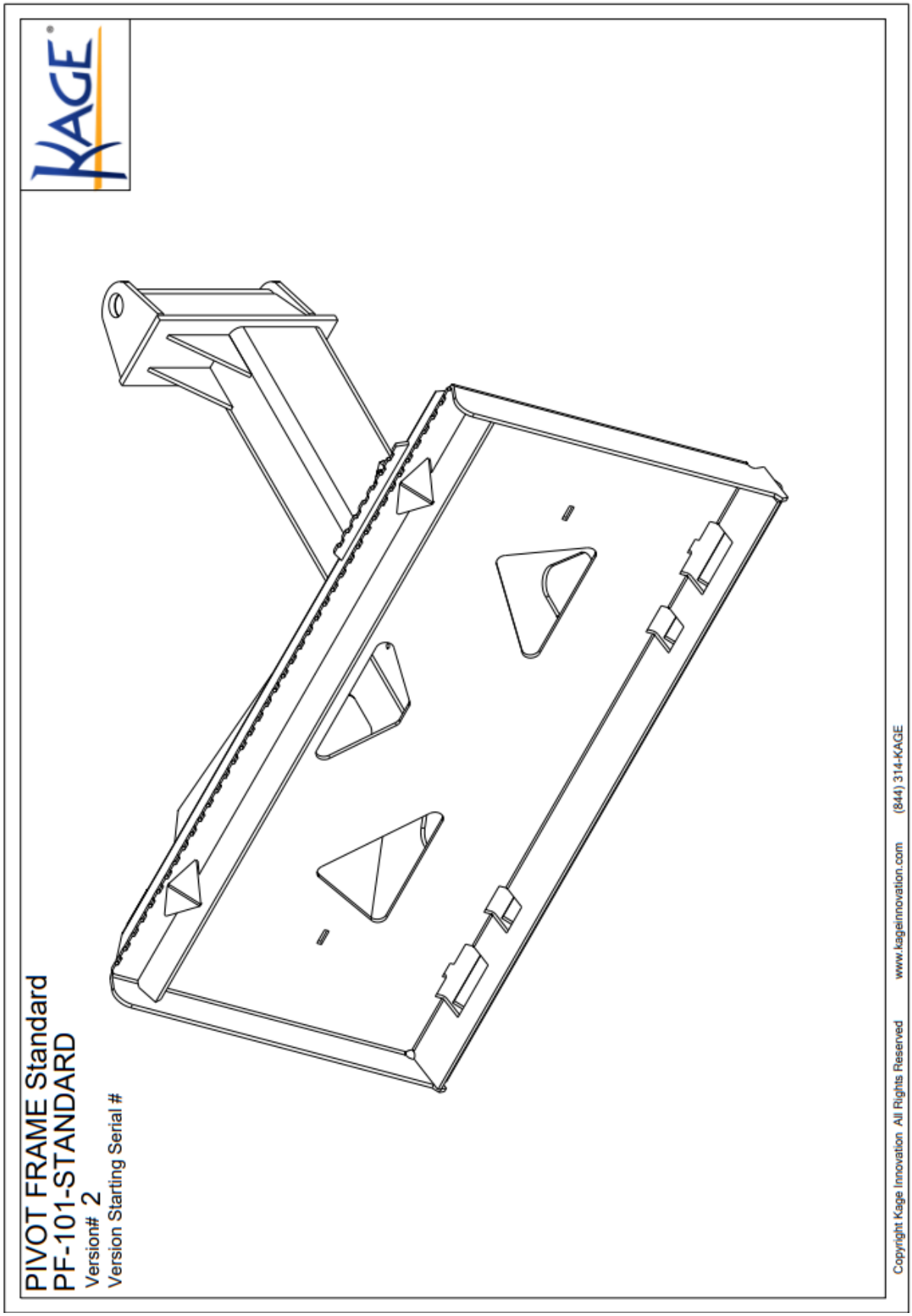
PIVOT FRAME Standard
PF-101-STANDARD
Version# 2
Version Starting Serial #
Copyright Kage Innovation All Rights Reserved
www.kageinnovation.com
(844) 314-KAGE

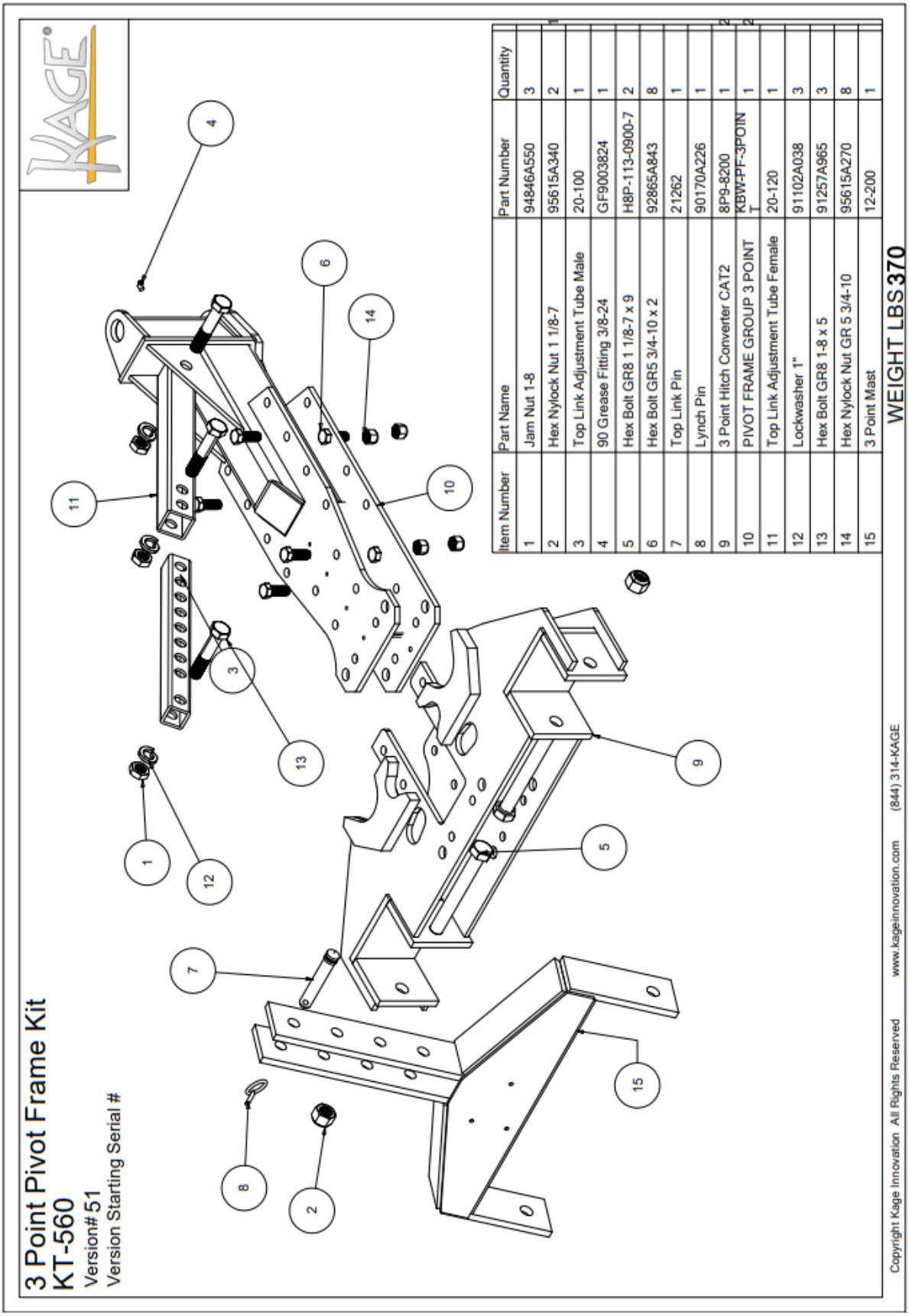

Item Number	Part Name	Part Number	Quantity
1	Jam Nut 1-8	94846A550	3
2	Hex Nylock Nut 1 1/8-7	95615A340	2
3	Top Link Adjustment Tube Male	20-100	1
4	90 Grease Fitting 3/8-24	GF9003824	1
5	Hex Bolt GR8 1 1/8-7 x 9	H8P-113-0900-7	2
6	Hex Bolt GR5 3/4-10 x 2	92865A843	8
7	Top Link Pin	21262	1
8	Lynch Pin	90170A226	1
9	3 Point Hitch Converter CAT2	8P9-8200	1
10	PIVOT FRAME GROUP 3 POINT	KBW-PF-3POINT	1
11	Top Link Adjustment Tube Female	20-120	1
12	Lockwasher 1"	91102A038	3
13	Hex Bolt GR8 1-8 x 5	91257A965	3
14	Hex Nylock Nut GR 5 3/4-10	95615A270	8
15	3 Point Mast	12-200	1

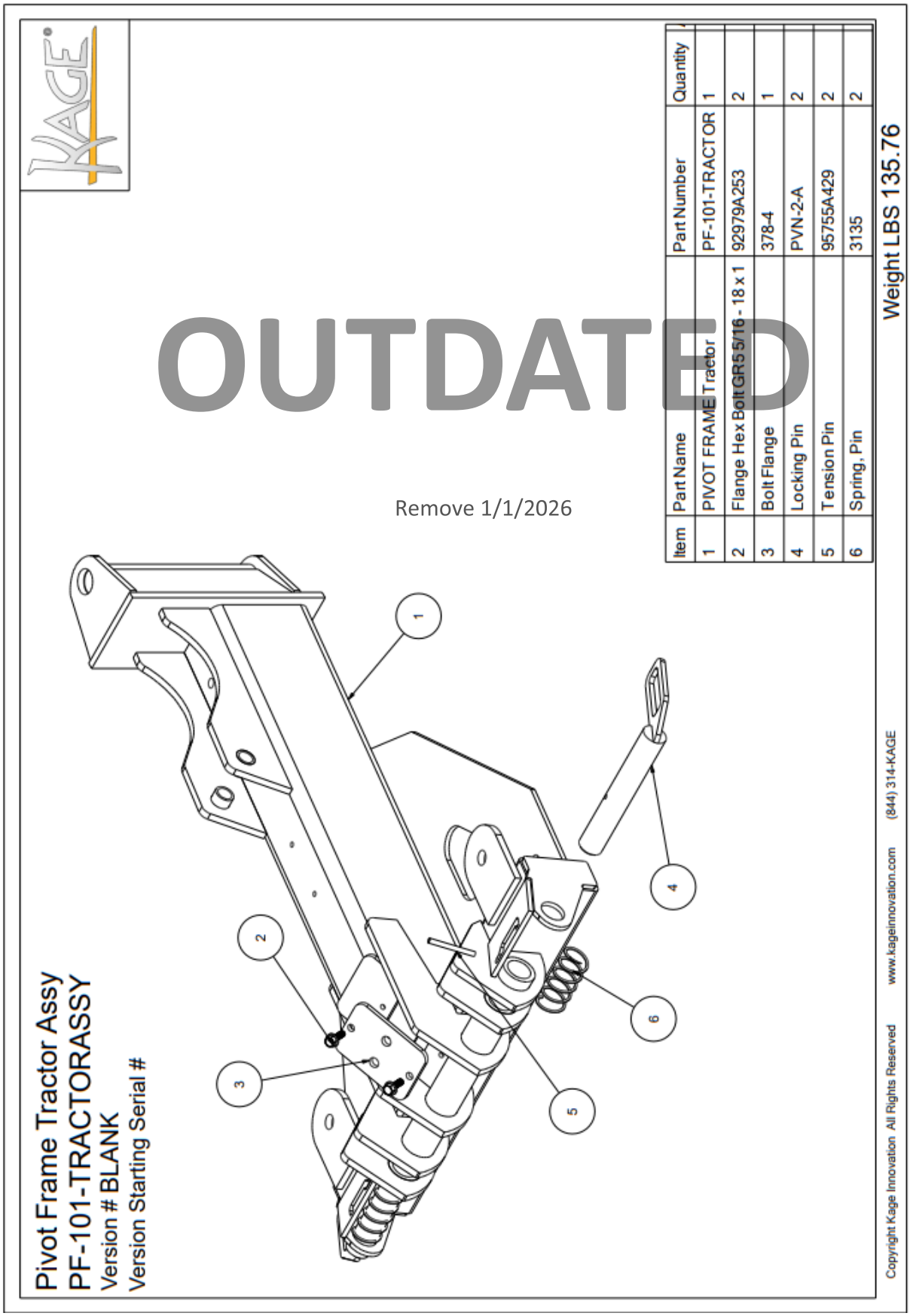

Item	Part Name	Part Number	Quantity
1	PIVOT FRAME Tractor	PF-101-TRACTOR	1
2	Flange Hex Bolt GR5 5/16 - 18 x 1	92979A253	2
3	Bolt Flange	378-4	1
4	Locking Pin	PVN-2-A	2
5	Tension Pin	95755A429	2
6	Spring, Pin	3135	2

OUTDATED

Remove 1/1/2026

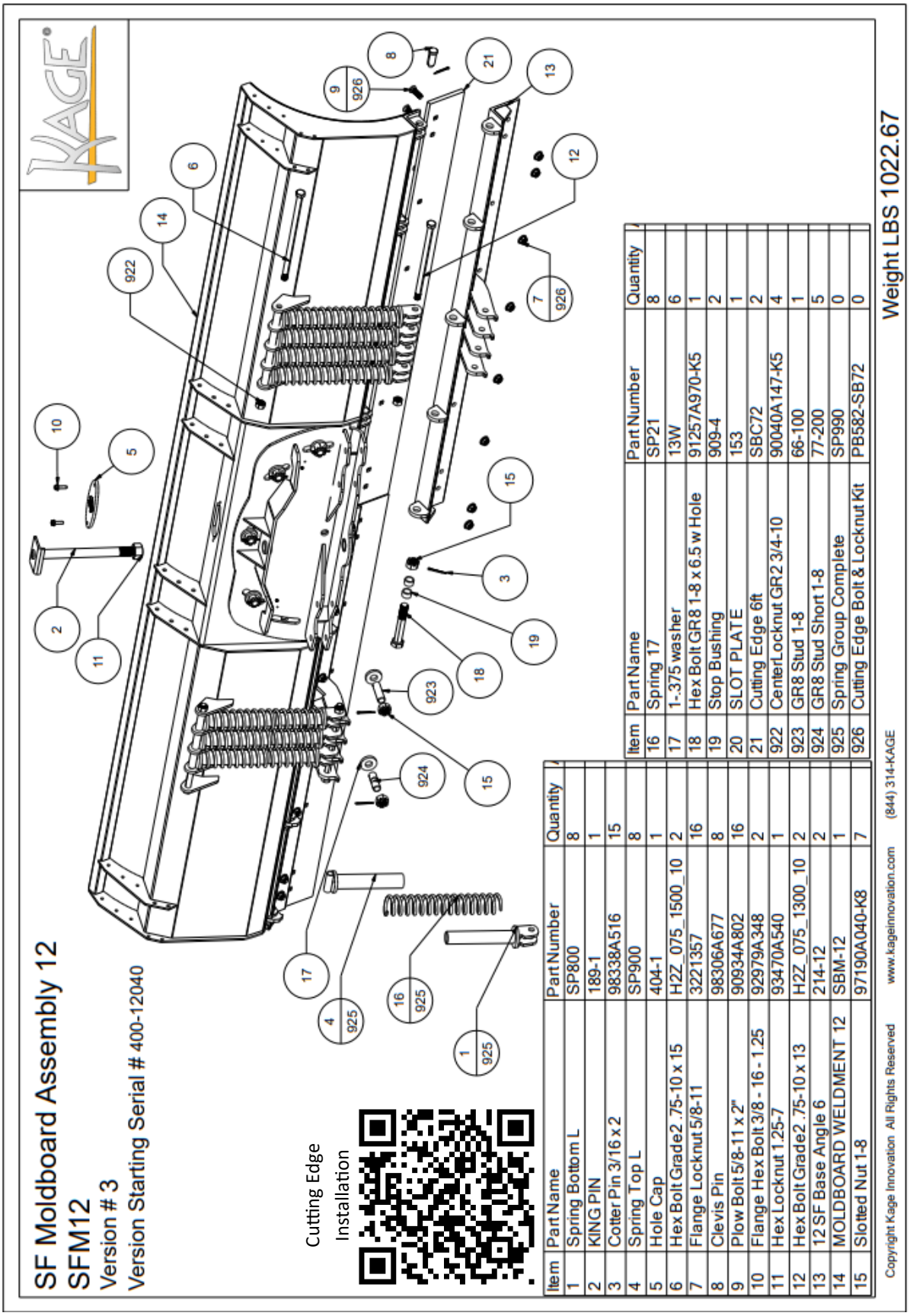

Item	Part Name	Part Number	Quantity
1	Spring Bottom L	SP800	8
2	KING PIN	189-1	1
3	Cotter Pin 3/16 x 2	98338A516	15
4	Spring Top L	SP900	8
5	Hole Cap	404-1	1
6	Hex Bolt Grade2 .75-10 x 15	H2Z_075_1500_10	2
7	Flange Locknut 5/8-11	3221357	16
8	Clevis Pin	98306A677	8
9	Plow Bolt 5/8-11 x 2"	90934A802	16
10	Flange Hex Bolt 3/8 - 16 - 1.25	92979A348	2
11	Hex Locknut 1.25-7	93470A540	1
12	Hex Bolt Grade2 .75-10 x 13	H2Z_075_1300_10	2
13	12 SF Base Angle 6	214-12	2
14	MOLDBOARD WELDMENT 12	SBM-12	1
15	Slotted Nut 1-8	97190A040-K8	7
16	Spring 17	SP21	8
17	1-.375 washer	13W	6
18	Hex Bolt GR8 1-8 x 6.5 w Hole	91257A970-K5	1
19	Stop Bushing	909-4	2
20	SLOT PLATE	153	1
21	Cutting Edge 6ft	SBC72	2
922	CenterLocknut GR2 3/4-10	90040A147-K5	4
923	GR8 Stud 1-8	66-100	1
924	GR8 Stud Short 1-8	77-200	5
925	Spring Group Complete	SP990	0
926	Cutting Edge Bolt & Locknut Kit	PB582-SB72	0

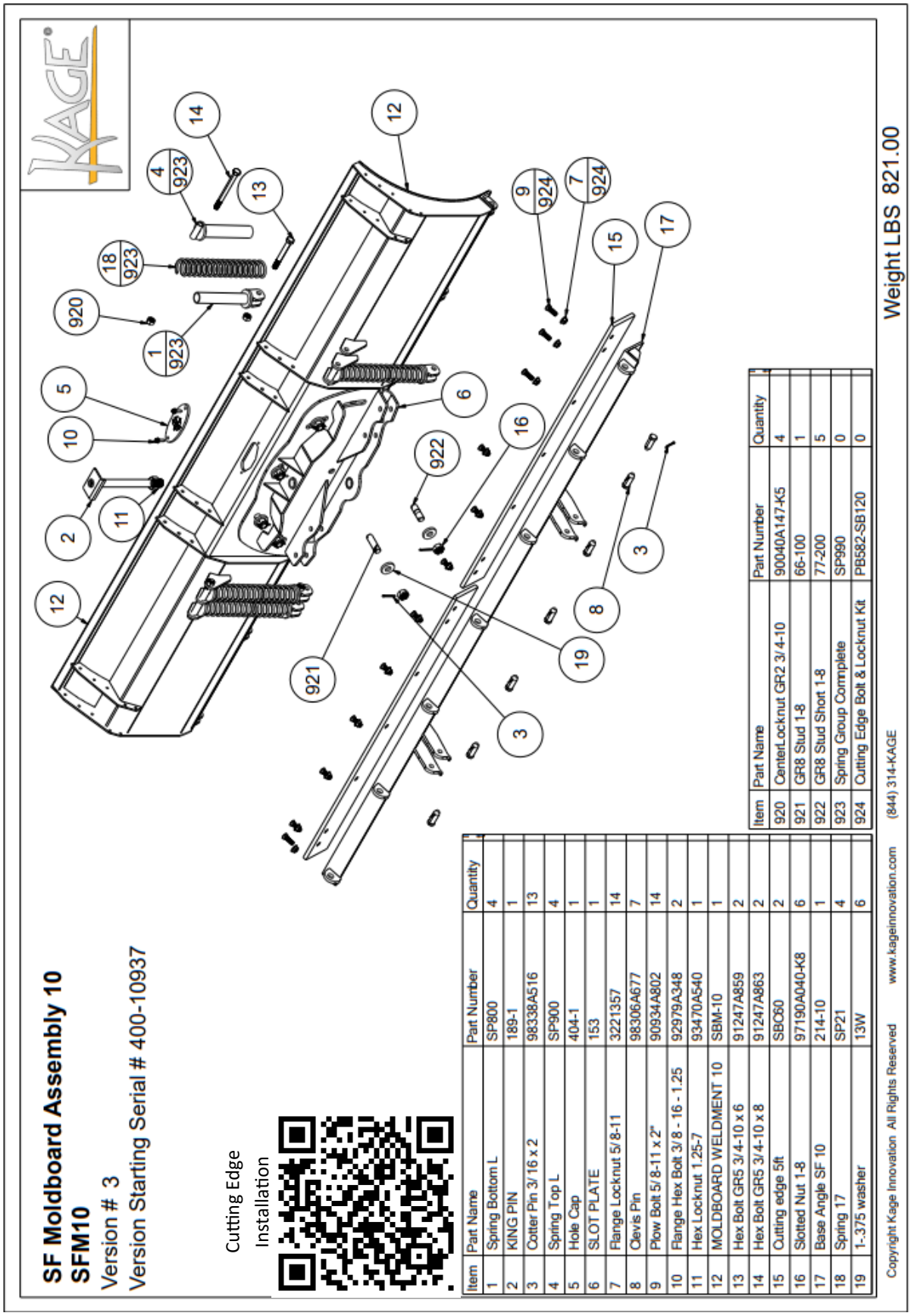

Item	Part Name	Part Number	Quantity
1	Spring Bottom L	SP800	4
2	KING PIN	189-1	1
3	Cotter Pin 3/16 x 2	98338A516	13
4	Spring Top L	SP900	4
5	Hole Cap	404-1	1
6	SLOT PLATE	153	1
7	Flange Locknut 5/8-11	3221357	14
8	Clevis Pin	98306A677	7
9	Plow Bolt 5/8-11 x 2"	90934A802	14
10	Flange Hex Bolt 3/8 - 16 - 1.25	92979A348	2
11	Hex Locknut 1.25-7	93470A540	1
12	MOLDBOARD WELDMENT 10	SBM-10	1
13	Hex Bolt GR5 3/4-10 x 6	91247A859	2
14	Hex Bolt GR5 3/4-10 x 8	91247A863	2
15	Cutting edge 5ft	SBC60	2
16	Slotted Nut 1-8	97190A040-K8	6
17	Base Angle SF 10	214-10	1
18	Spring 17	SP21	4
19	1-.375 washer	13W	6

Item	Part Name	Part Number	Quantity
920	CenterLocknut GR2 3/4-10	90040A147-K5	4
921	GR8 Stud 1-8	66-100	1
922	GR8 Stud Short 1-8	77-200	5
923	Spring Group Complete	SP990	0
924	Cutting Edge Bolt & Locknut Kit	PB582-SB120	0

SF Moldboard Assembly 9

SFM9

Version # 2

Version Starting Serial # 400-52913

Cutting Edge Installation

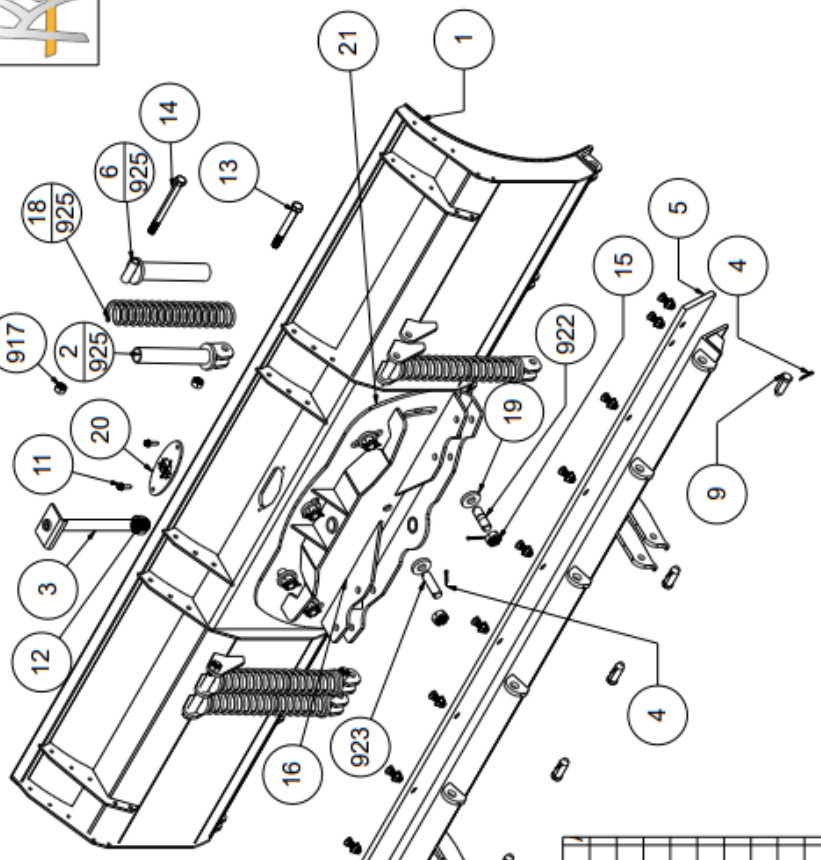

Item	Part Name	Part Number	Quantity
1	MOLDBOARD WELDMENT 9	SBM-9	1
2	Spring Bottom L	SP800	4
3	KING PIN	189-1	1
4	Cotter Pin 3/16 x 2	98338A516	13
5	Cutting edge 9ft	SBC108	1
6	Spring Top L	SP900	4
7	Flange Locknut 5/8-11	3221357	11
8	Base Angle SF 9	214-9	1
9	Clevis Pin	98306A677	7
10	Plow Bolt 5/8-11 x 2"	90934A802	11
11	Flange Hex Bolt 3/8 - 16 - 125	92979A348	2
12	Hex Locknut 1.25-7	93470A540	1
13	Hex Bolt GR5 3/4-10 x 6	91247A859	2
14	Hex Bolt GR5 3/4-10 x 8	91247A863	2
15	Slotted Nut 1-8	97190A040-K8	6
16	SLOT PLATE	153	1
917	CenterLocknut GR2 3/4-10	90040A147-K5	4
18	Spring 17	SP21	4

Item	Part Name	Part Number	Quantity
19	1-.375 washer	13W	6
20	Hole Cap	404-1	1
21	Cotter Pin 3/16 x 2	98338A516	6
922	GR8 Stud Short 1-8	77-200	5
923	GR8 Stud 1-8	66-100	1
924	Bolt And Locknut Kit (#8 & #11)	PB582-SB108	0
925	Spring Group Complete	SP990	0

Weight LBS 764.00

Copyright Kage Innovation All Rights Reserved www.kageinnovation.com (844) 314-KAGE

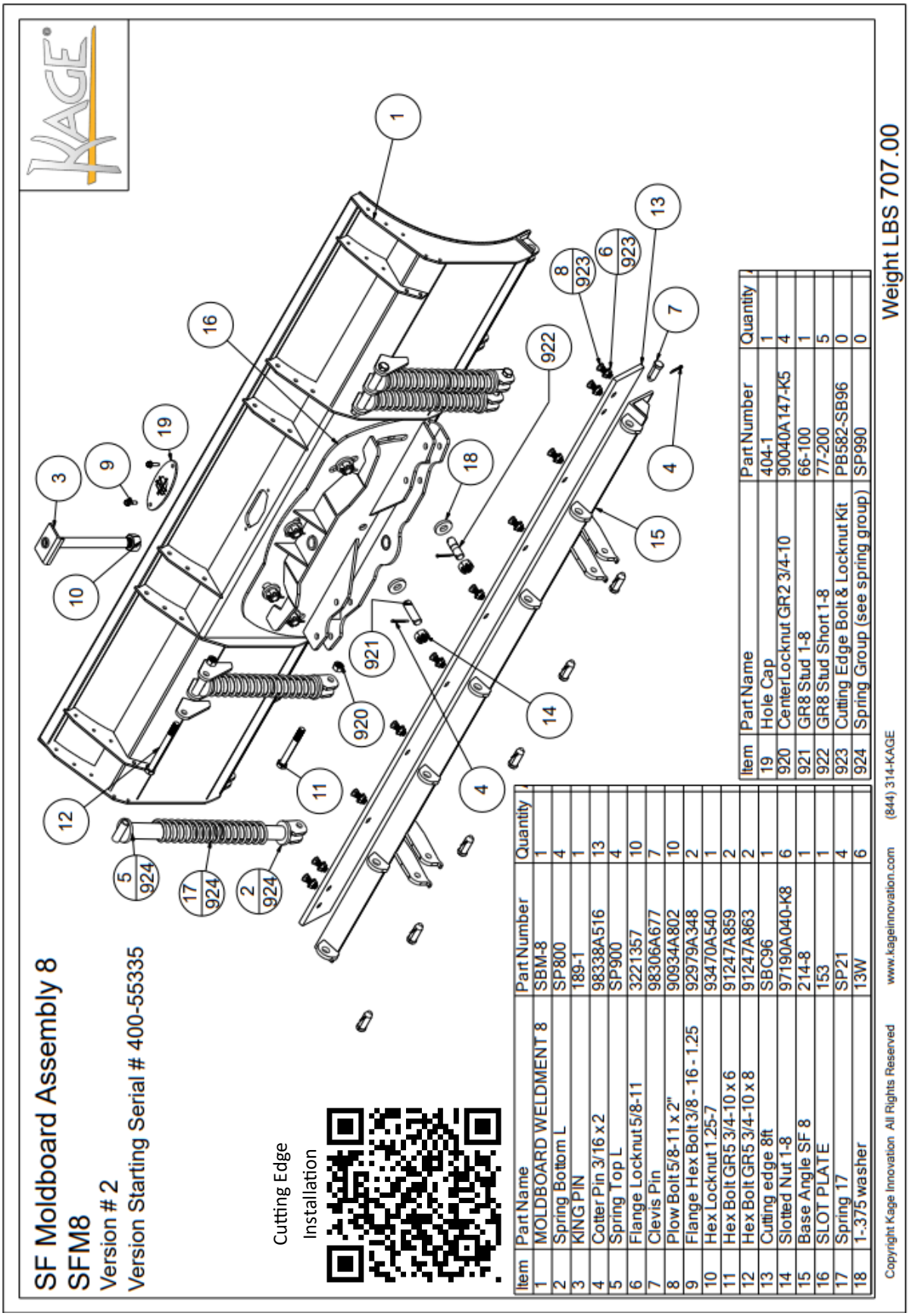

Item	Part Name	Part Number	Quantity
1	MOLDBOARD WELDMENT 8	SBM-8	1
2	Spring Bottom L	SP800	4
3	KING PIN	189-1	1
4	Cotter Pin 3/16 x 2	98338A516	13
5	Spring Top L	SP900	4
6	Flange Locknut 5/8-11	3221357	10
7	Clevis Pin	98306A677	7
8	Plow Bolt 5/8-11 x 2"	90934A802	10
9	Flange Hex Bolt 3/8 - 16 - 1.25	92979A348	2
10	Hex Locknut 1.25-7	93470A540	1
11	Hex Bolt GR5 3/4-10 x 6	91247A859	2
12	Hex Bolt GR5 3/4-10 x 8	91247A863	2
13	Cutting edge 8ft	SBC96	1
14	Slotted Nut 1-8	97190A040-K8	6
15	Base Angle SF 8	214-8	1
16	SLOT PLATE	153	1
17	Spring 17	SP21	4
18	1-.375 washer	13W	6

Item	Part Name	Part Number	Quantity
19	Hole Cap	404-1	1
920	CenterLocknut GR2 3/4-10	90040A147-K5	4
921	GR8 Stud 1-8	66-100	1
922	GR8 Stud Short 1-8	77-200	5
923	Cutting Edge Bolt & Locknut Kit	PB582-SB96	0
924	Spring Group (see spring group)	SP990	0

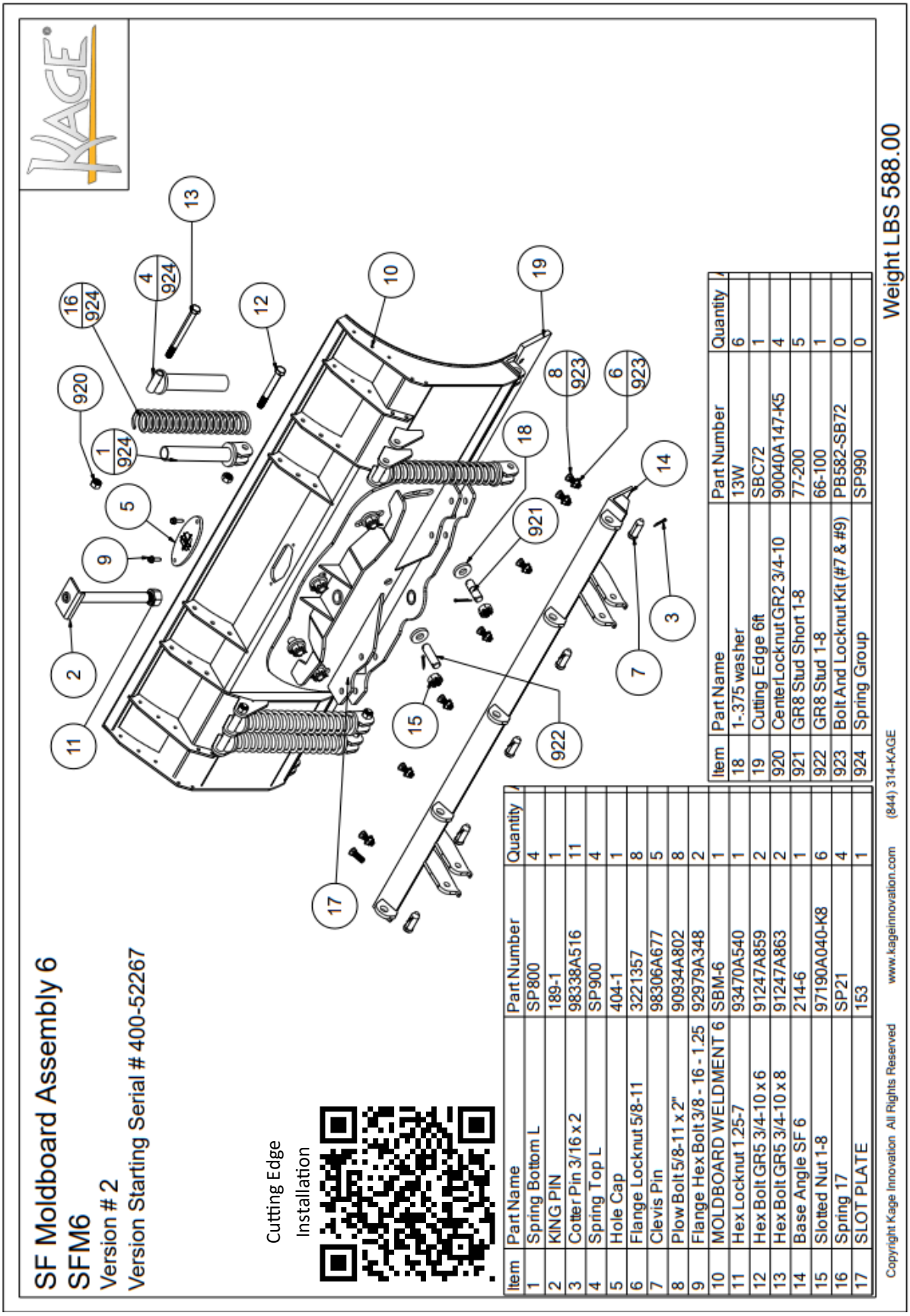

Item	Part Name	Part Number	Quantity
1	Spring Bottom L	SP800	4
2	KING PIN	189-1	1
3	Cotter Pin 3/16 x 2	98338A516	11
4	Spring Top L	SP900	4
5	Hole Cap	404-1	1
6	Flange Locknut 5/8-11	3221357	8
7	Clevis Pin	98306A677	5
8	Plow Bolt 5/8-11 x 2"	90934A802	8
9	Flange Hex Bolt 3/8 - 16 - 1.25	92979A348	2
10	MOLDBOARD WELDMENT 6	SBM-6	1
11	Hex Locknut 1.25-7	93470A540	1
12	Hex Bolt GR5 3/4-10 x 6	91247A859	2
13	Hex Bolt GR5 3/4-10 x 8	91247A863	2
14	Base Angle SF 6	214-6	1
15	Slotted Nut 1-8	97190A040-K8	6
16	Spring 17	SP21	4
17	SLOT PLATE	153	1

Item	Part Name	Part Number	Quantity
18	1-.375 washer	13W	6
19	Cutting Edge 6ft	SBC72	1
920	CenterLocknut GR2 3/4-10	90040A147-K5	4
921	GR8 Stud Short 1-8	77-200	5
922	GR8 Stud 1-8	66-100	1
923	Bolt And Locknut Kit (#7 & #9)	PB582-SB72	0
924	Spring Group	SP990	0

SF Moldboard Assembly 54

SFM54

Version # 2

Version Starting Serial #

Cutting Edge Installation

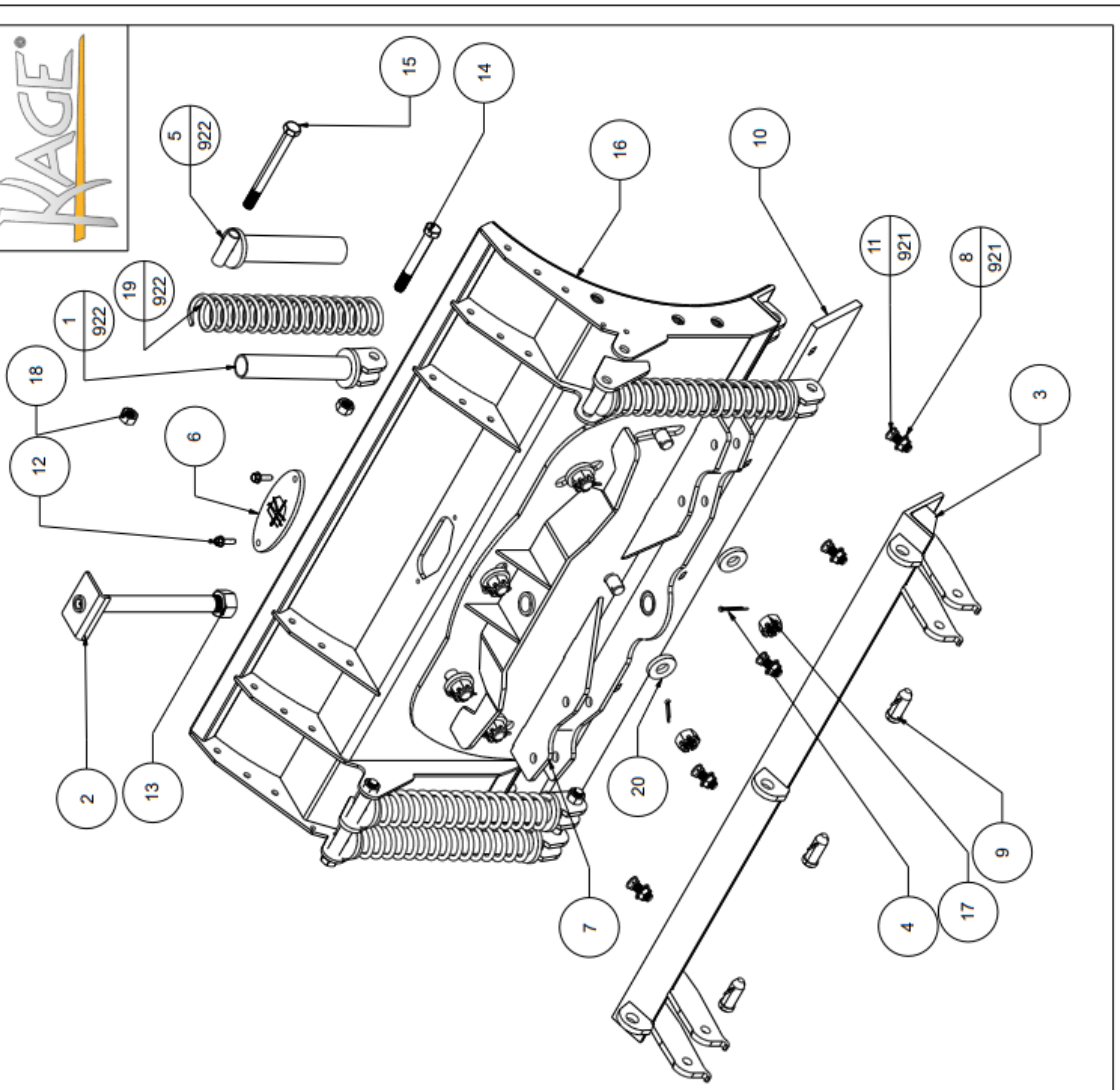

Item	Part Name	Part Number	Quantity
1	Spring Bottom L	SP800	4
2	KING PIN	189-1	1
3	Base Angle SF 54	214-54	1
4	Cotter Pin 3/16 x 2	98338A516	9
5	Spring Top L	SP900	4
6	Hole Cap	404-1	1
7	SLOT PLATE	153	1
8	Flange Locknut 5/8-11	3221357	5
9	Clevis Pin	98306A677	3
10	Cutting Edge 54	SBC54	1
11	Plow Bolt 5/8-11 x 2"	90934A802	5
12	Flange Hex Bolt 3/8 - 16 - 1.25	92979A348	2
13	Hex Locknut 1.25-7	93470A540	1
14	Hex Bolt GR5 3/4-10 x 6	91247A859	2
15	Hex Bolt GR5 3/4-10 x 8	91247A863	2
16	MOLDBOARD WELDMENT 54	SBM-54	1
17	Slotted Nut 1-8	97190A040-K8	6
18	CenterLocknut GR2 3/4-10	90040A147-K5	4
19	Spring 17	SP21	4
20	1-.375 washer	13W	6
921	Bolt And Locknut Kit (#7 & #9)	PB582-SB72	0
922	Spring Group	SP990	0

Weight LBS 588

Copyright Kage Innovation All Rights Reserved www.kageinnovation.com (844) 314-KAGE

Quick Attach Dimension Chart SF

Fill out table with your coupler's relevent dimensions.
Send sheet to your Dealer, or Kage salesmen.

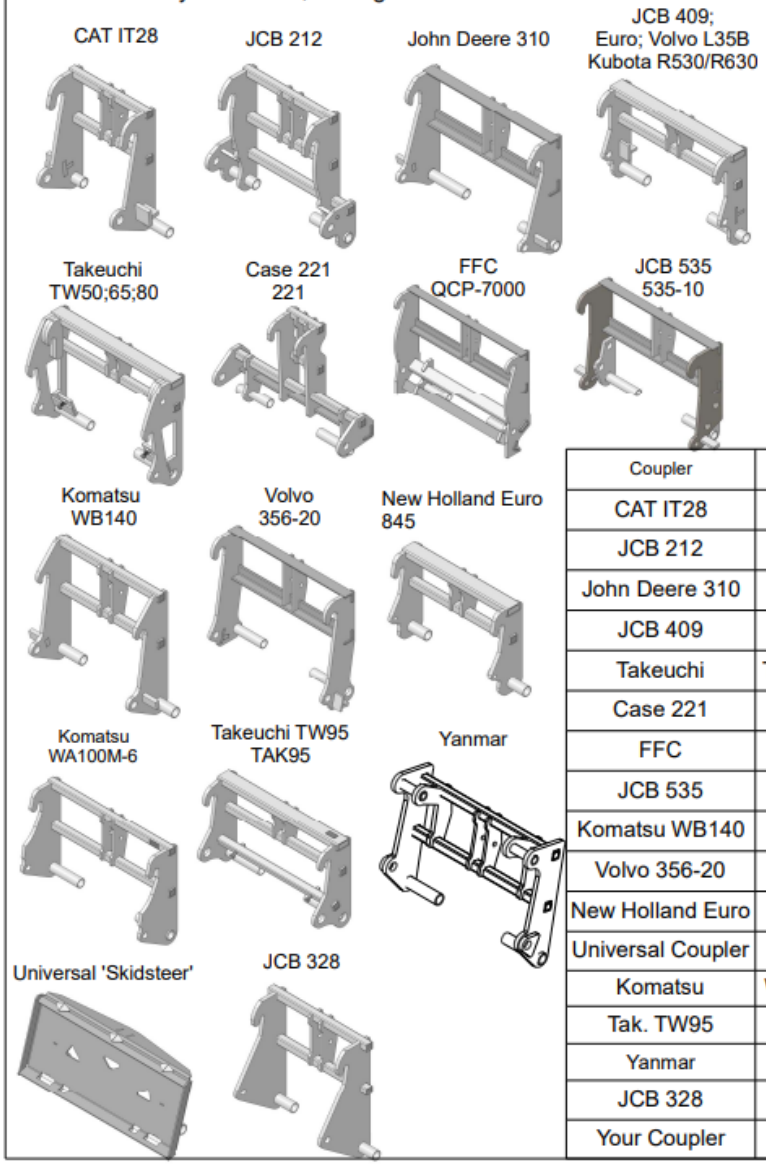

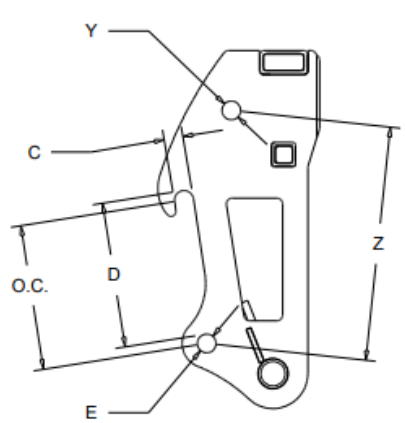

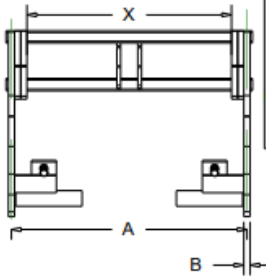

Z: Marks additional dimensions for combination couplers

X: Marks additional width dimensions for ears on different planes then the main ears

Y: Marks diameter for additional holes on combination couplers

Couplers available for use with SnowFire Kage Blades.
Use this chart to confirm which coupler will fit on your machine.
All dimensions are in inches.

Coupler	Kage Part Number	A	B	C	D	E	O.C.	X	Y	Z	Non-stocked Additional Cost
CAT IT28	28-10	21.875	1.125	2.520	20.17	2.063	19.937				
JCB 212	212	25.188	1.000	2.280	19.47	1.760	19.209	33.750			
John Deere 310	JD310	38.000	1.000	2.596	20.76	1.825	20.321				
JCB 409	409	35.125	1.000	1.650	12.32	1.590	12.289				
Takeuchi	TAK506580	37.250	1.125	1.580	12.21	1.580	12.200	33.126	1.580	19.690	
Case 221	221	9.250	1.000	2.000	20.162	2.025	20.174	42.000			
FFC	FFC	47.500	1.000	2.066	24.5	2.060	24.498				
JCB 535	535-10	40.375	1.000	2.410	24.09	1.509	23.652				
Komatsu WB140	WB140	29.375	1.000	2.030	17.09	1.810	17.687				
Volvo 356-20	356-20	39.375	1.000	2.420	24.38	2.000	24.187				
New Holland Euro	845	30.250	1.000	1.650	12.16	.920	11.750				
Universal Coupler	28-600	-	-	-	-	-					
Komatsu	WA100M-6	39.000	1.000	1.562	17.09	1.562	17.062				
Tak. TW95	TAK95	38.125	1.000	2.187	14.86	2.375	15.000				
Yanmar		38.250	1.000	2.000	19.750	2.000	19.750	25.250			Yes
JCB 328	JCB 328	26.620	1.000	1.250	18.118	1.615	18.300				
Your Coupler											

Copyright Kage Innovation All Rights Reserved www.kageinnovation.com (844) 314-KAGE

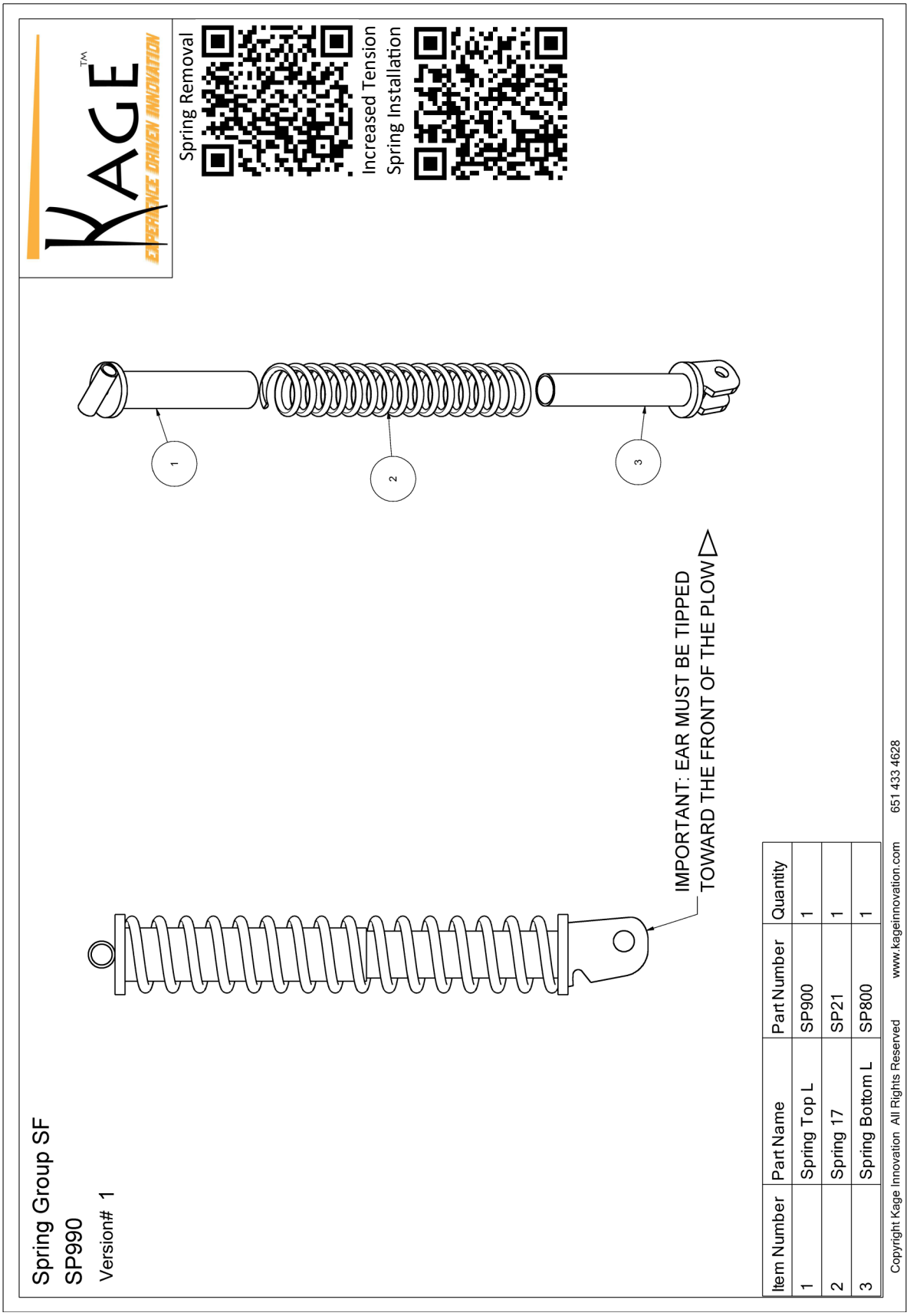

Item Number	Part Name	Part Number	Quantity
1	Spring Top L	SP900	1
2	Spring 17	SP21	1
3	Spring Bottom L	SP800	1

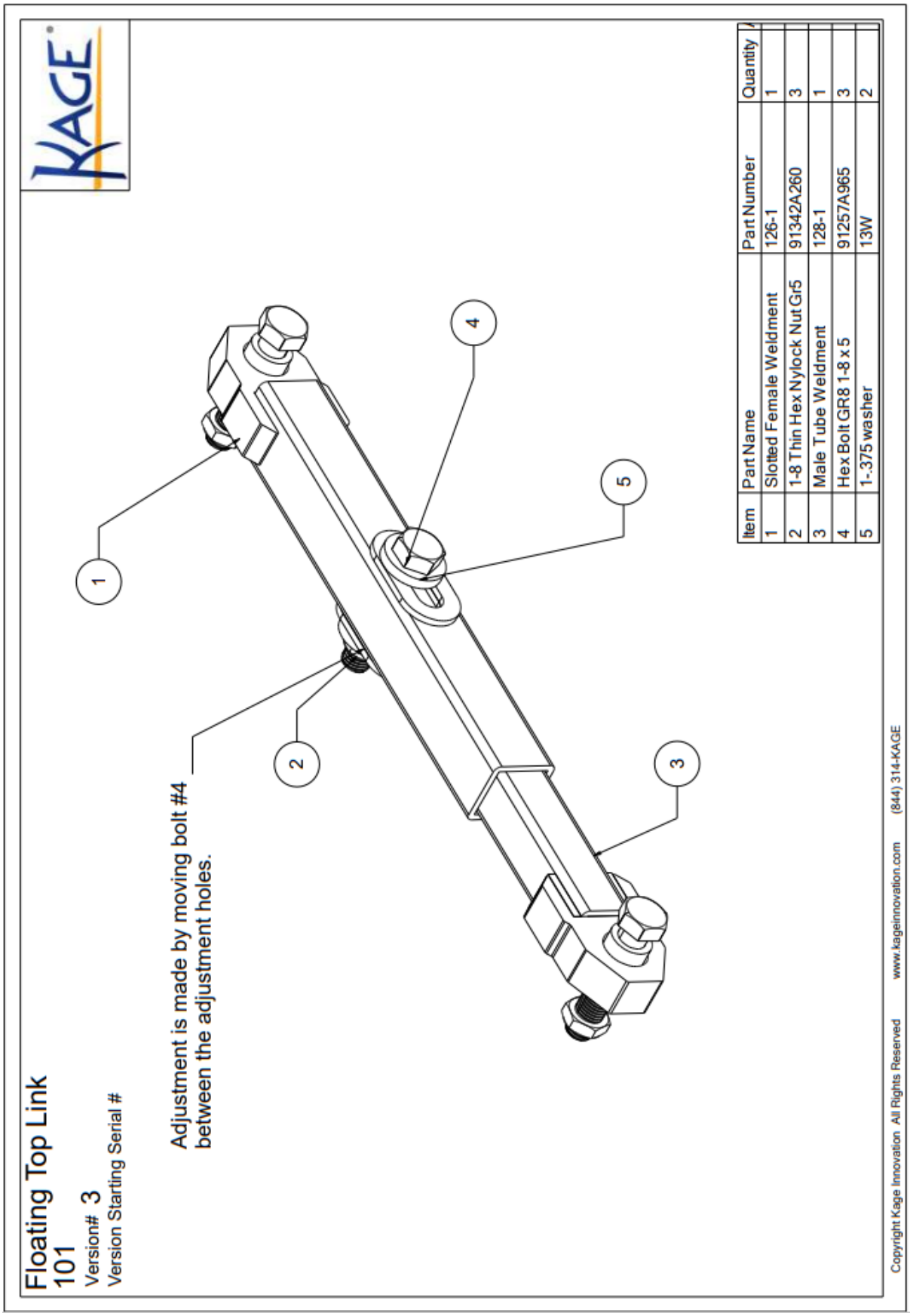

Item	Part Name	Part Number	Quantity
1	Slotted Female Weldment	126-1	1
2	1-8 Thin Hex Nylock Nut Gr5	91342A260	3
3	Male Tube Weldment	128-1	1
4	Hex Bolt GR8 1-8 x 5	91257A965	3
5	1-.375 washer	13W	2

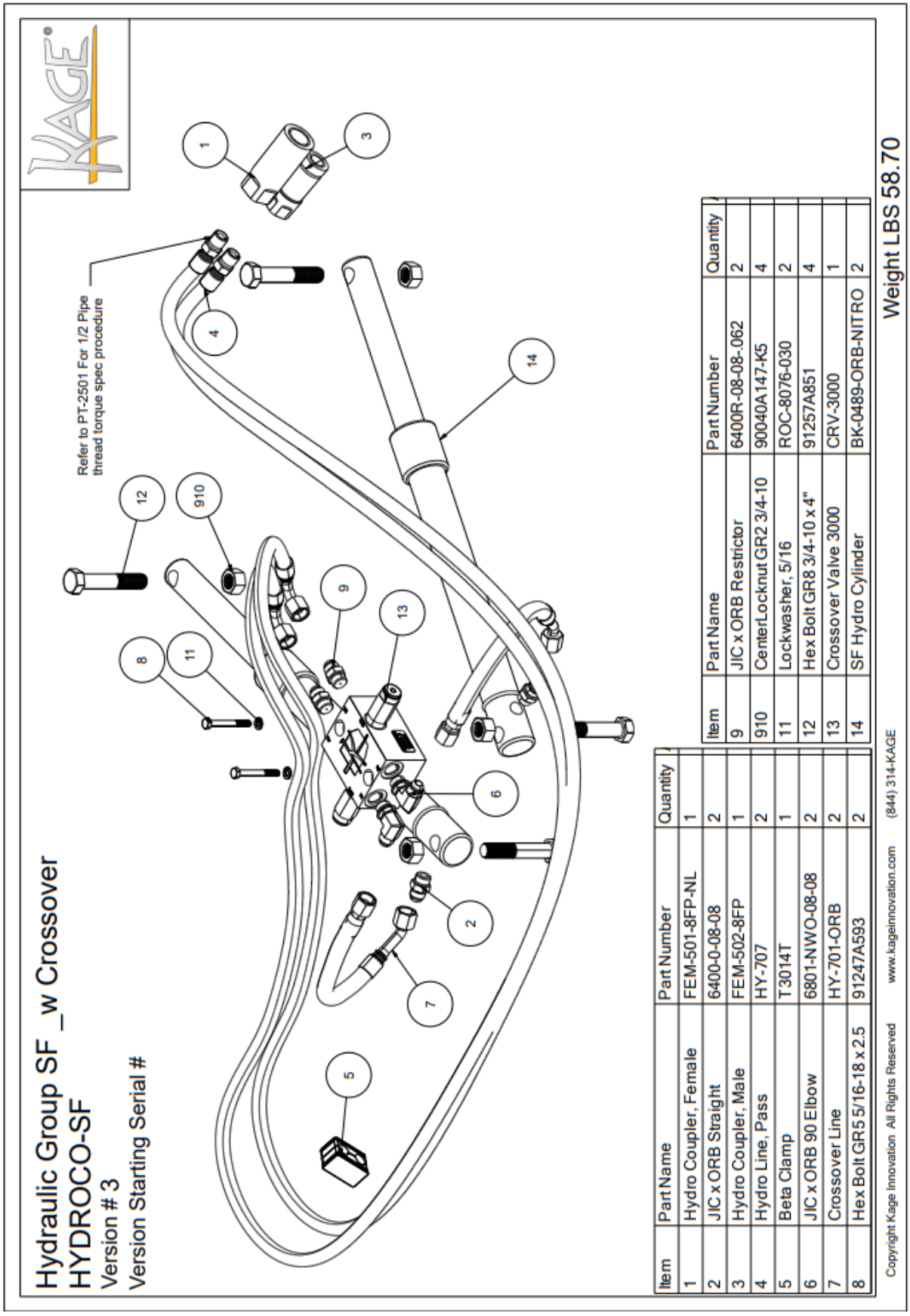

Item	Part Name	Part Number	Quantity
1	Hydro Coupler, Female	FEM-501-8FP-NL	1
2	JIC x ORB Straight	6400-0-08-08	2
3	Hydro Coupler, Male	FEM-502-8FP	1
4	Hydro Line, Pass	HY-707	2
5	Beta Clamp	T3014T	1
6	JIC x ORB 90 Elbow	6801-NWO-08-08	2
7	Crossover Line	HY-701-ORB	2
8	Hex Bolt GR5 5/16-18 x 2.5	91247A593	2

Item	Part Name	Part Number	Quantity
9	JIC x ORB Restrictor	6400R-08-08-.062	2
910	CenterLocknut GR2 3/4-10	90040A147-K5	4
11	Lockwasher, 5/16	ROC-8076-030	2
12	Hex Bolt GR8 3/4-10 x 4"	91257A851	4
13	Crossover Valve 3000	CRV-3000	1
14	SF Hydro Cylinder	BK-0489-ORB-NITRO	2

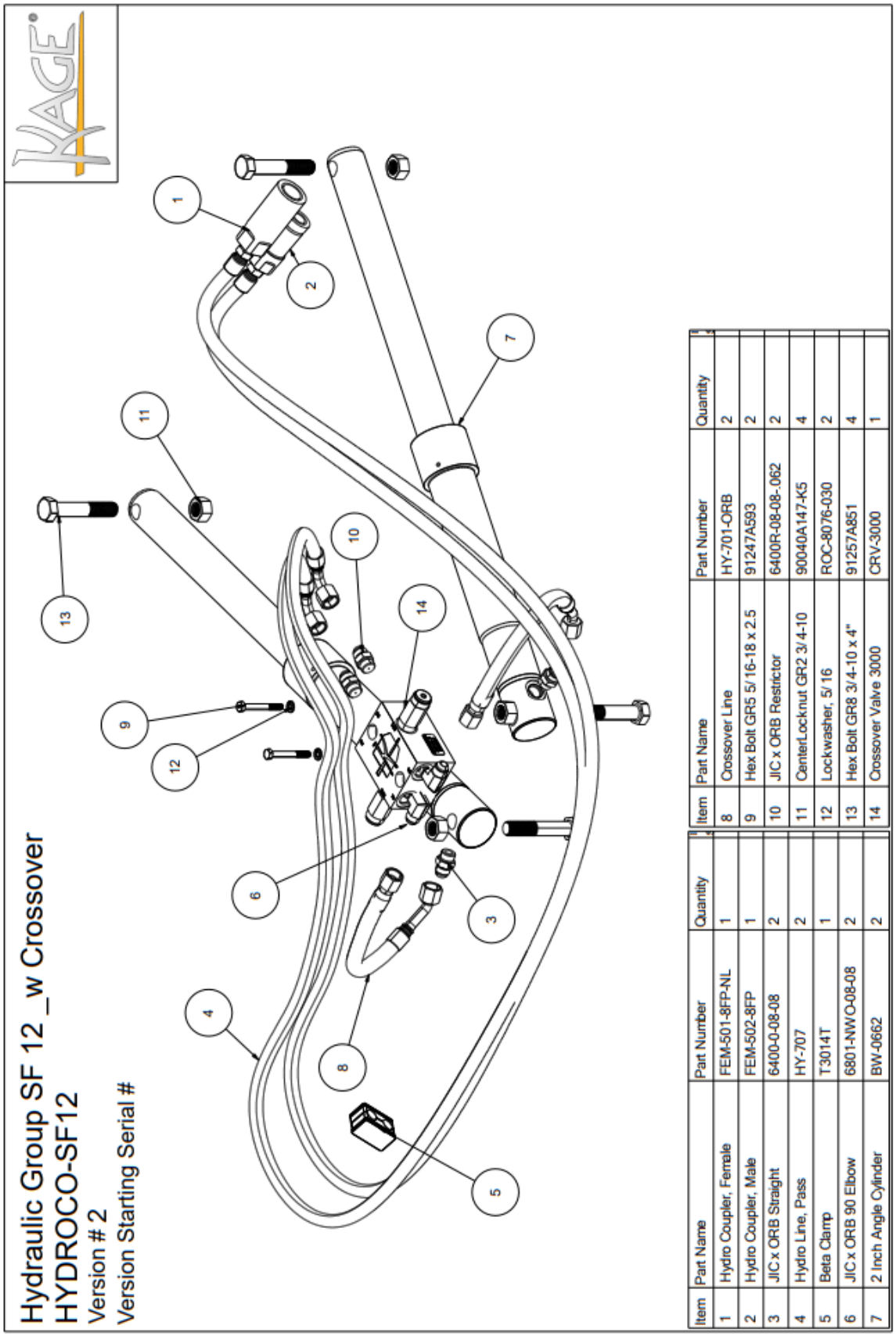

Item	Part Name	Part Number	Quantity
1	Hydro Coupler, Female	FEM-501-8FP-NL	1
2	Hydro Coupler, Male	FEM-502-8FP	1
3	JIC x ORB Straight	6400-0-08-08	2
4	Hydro Line, Pass	HY-707	2
5	Beta Clamp	T3014T	1
6	JIC x ORB 90 Elbow	6801-NWO-08-08	2
7	2 Inch Angle Cylinder	BW-0662	2
8	Crossover Line	HY-701-ORB	2
9	Hex Bolt GR5 5/16-18 x 2.5	91247A593	2
10	JIC x ORB Restrictor	6400R-08-08-.062	2
11	CenterLocknut GR2 3/4-10	90040A147-K5	4
12	Lockwasher, 5/16	ROC-8076-030	2
13	Hex Bolt GR8 3/4-10 x 4"	91257A851	4
14	Crossover Valve 3000	CRV-3000	1

Weight LBS 64.60

Copyright Kage Innovation All Rights Reserved www.kageinnovation.com (844) 314-KAGE

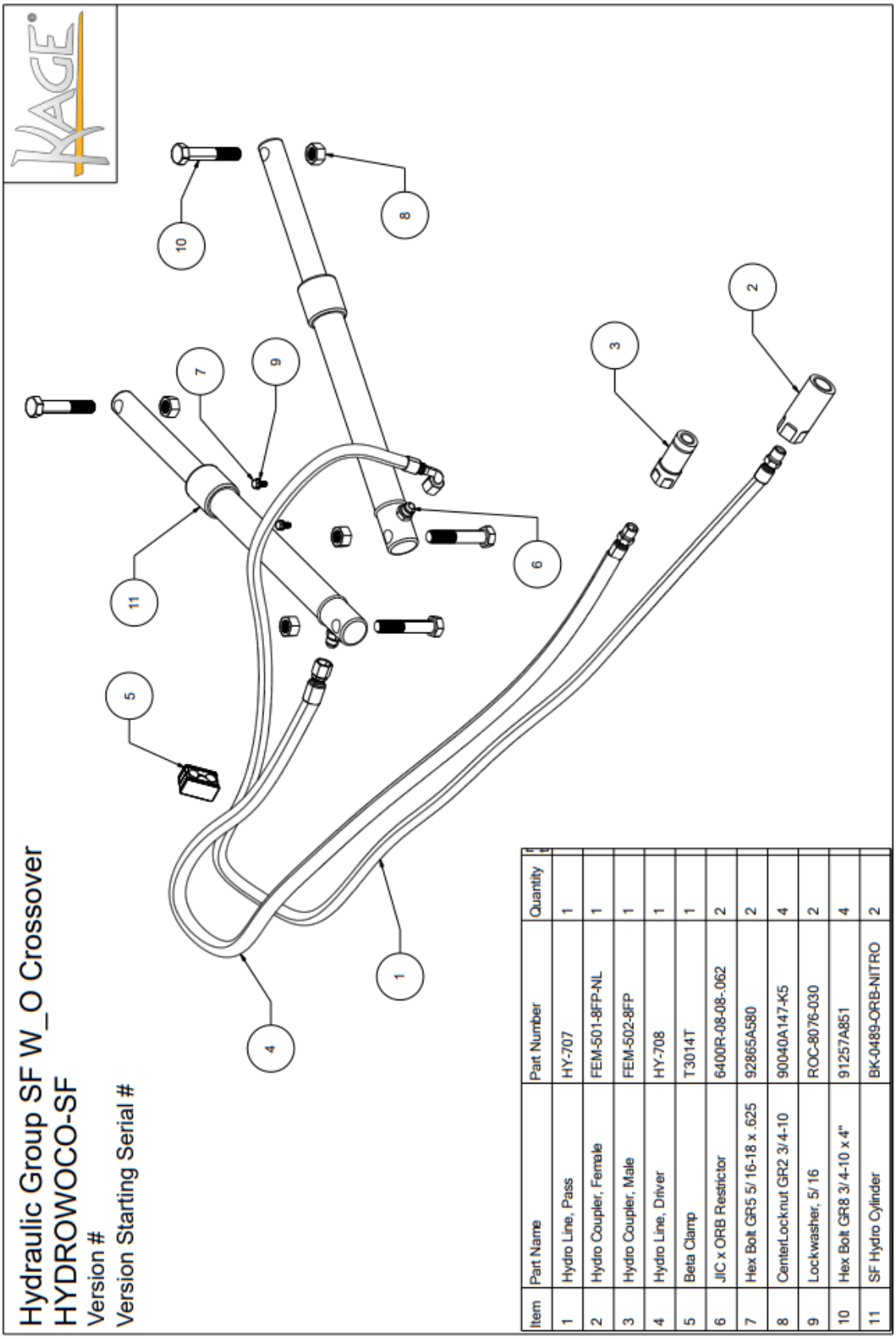

Item	Part Name	Part Number	Quantity
1	Hydro Line, Pass	HY-707	1
2	Hydro Coupler, Female	FEM-501-8FP-NL	1
3	Hydro Coupler, Male	FEM-502-8FP	1
4	Hydro Line, Driver	HY-708	1
5	Beta Clamp	T3014T	1
6	JIC x ORB Restrictor	6400R-08-08-.062	2
7	Hex Bolt GR5 5/ 16-18 x .625	92865A580	2
8	CenterLocknut GR2 3/ 4-10	90040A147-K5	4
9	Lockwasher, 5/ 16	ROC-8076-030	2
10	Hex Bolt GR8 3/ 4-10 x 4"	91257A851	4
11	SF Hydro Cylinder	BK-0489-ORB-NITRO	2

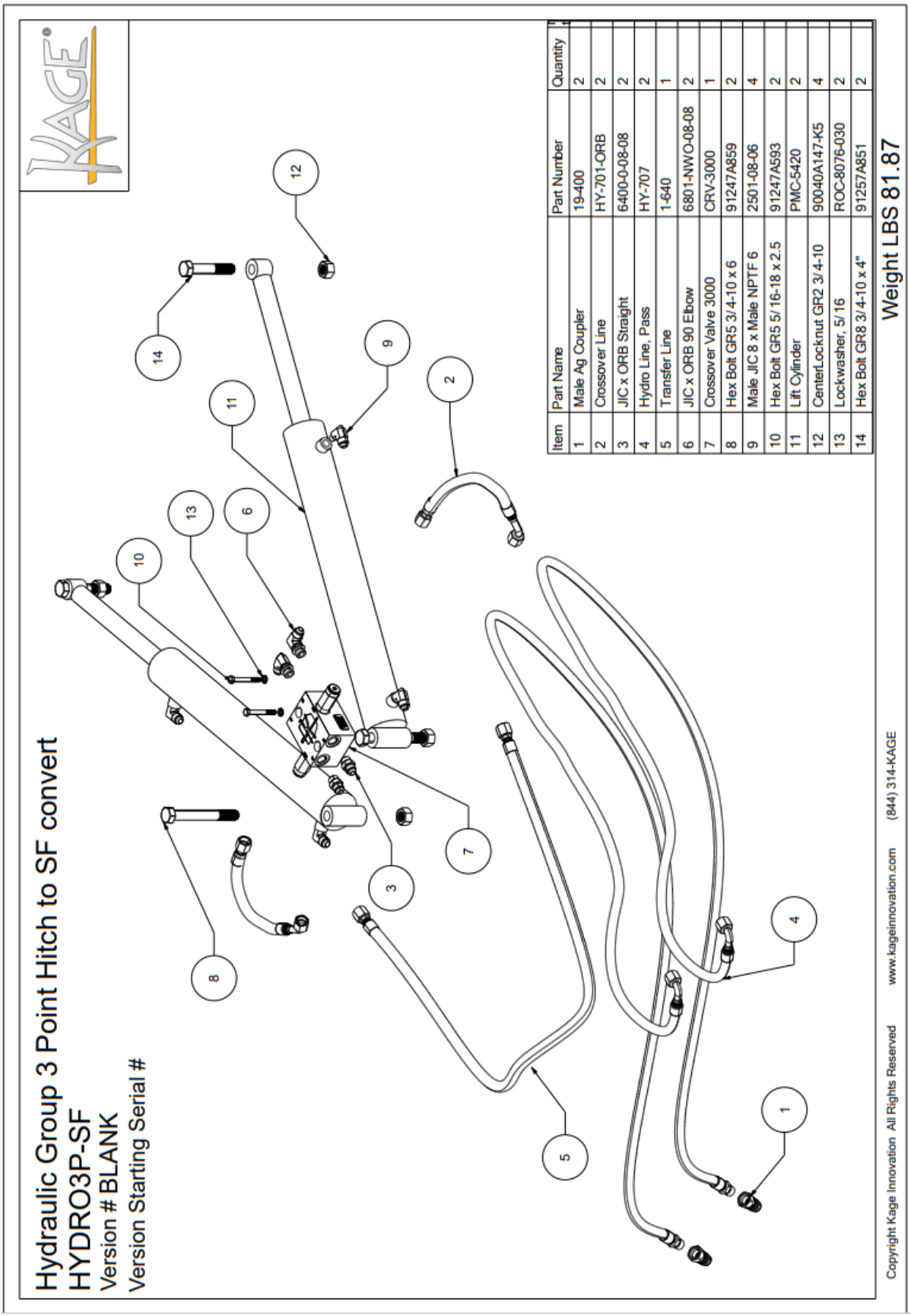

Item	Part Name	Part Number	Quantity
1	Male Ag Coupler	19-400	2
2	Crossover Line	HY-701-ORB	2
3	JIC x ORB Straight	6400-0-08-08	2
4	Hydro Line, Pass	HY-707	2
5	Transfer Line	1-640	1
6	JIC x ORB 90 Elbow	6801-NWO-08-08	2
7	Crossover Valve 3000	CRV-3000	1
8	Hex Bolt GR5 3/ 4-10 x 6	91247A859	2
9	Male JIC 8 x Male NPTF 6	2501-08-06	4
10	Hex Bolt GR5 5/ 16-18 x 2.5	91247A593	2
11	Lift Cylinder	PMC-5420	2
12	CenterLocknut GR2 3/ 4-10	90040A147-K5	4
13	Lockwasher, 5/ 16	ROC-8076-030	2
14	Hex Bolt GR8 3/ 4-10 x 4"	91257A851	2

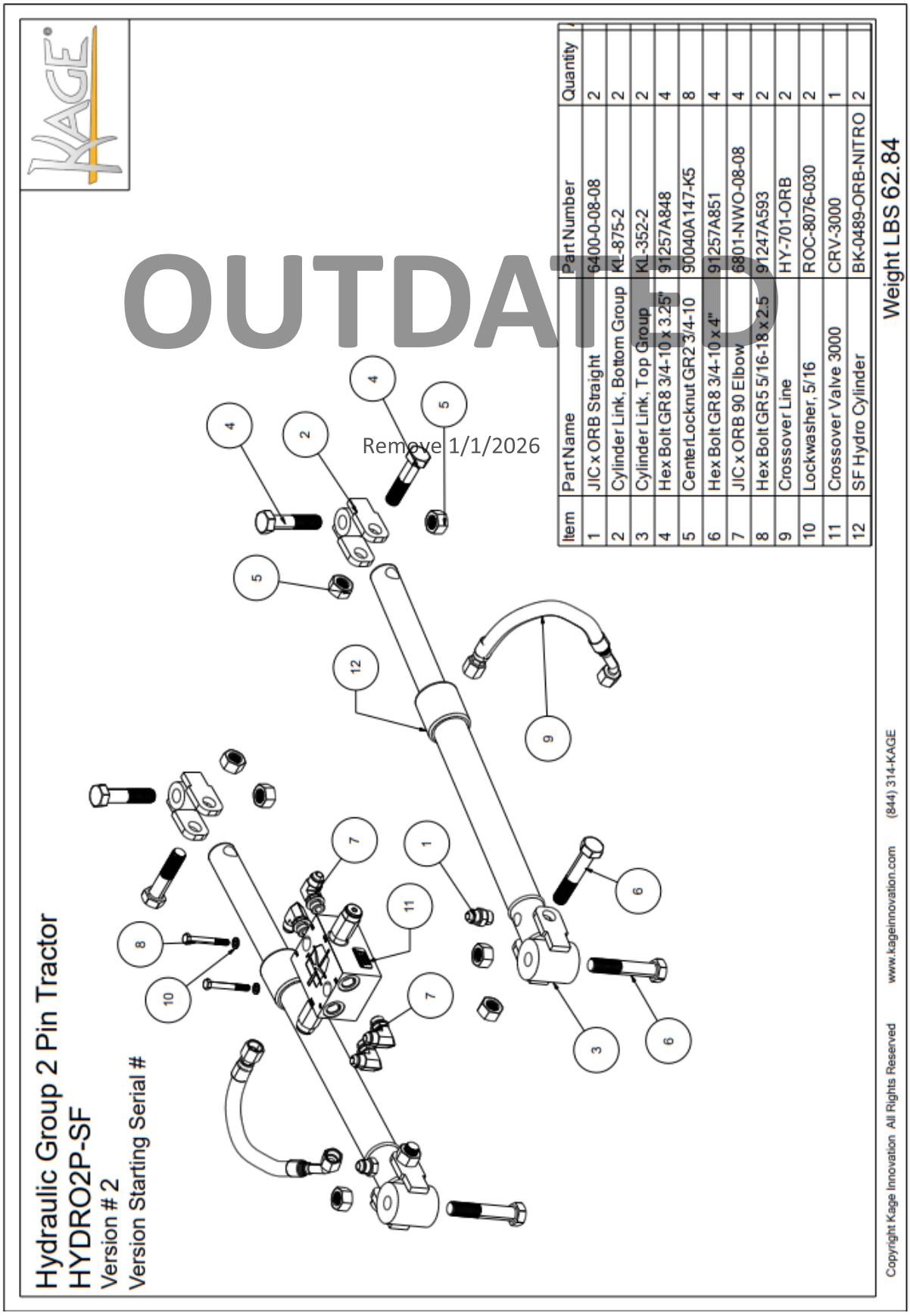

Item	Part Name	Part Number	Quantity
1	JIC x ORB Straight	6400-0-08-08	2
2	Cylinder Link, Bottom Group	KL-875-2	2
3	Cylinder Link, Top Group	KL-352-2	2
4	Hex Bolt GR8 3/4-10 x 3.25"	91257A848	4
5	CenterLocknut GR2 3/4-10	90040A147-K5	8
6	Hex Bolt GR8 3/4-10 x 4"	91257A851	4
7	JIC x ORB 90 Elbow	6801-NWO-08-08	4
8	Hex Bolt GR5 5/16-18 x 2.5	91247A593	2
9	Crossover Line	HY-701-ORB	2
10	Lockwasher, 5/16	ROC-8076-030	2
11	Crossover Valve 3000	CRV-3000	1
12	SF Hydro Cylinder	BK-0489-ORB-NITRO	2

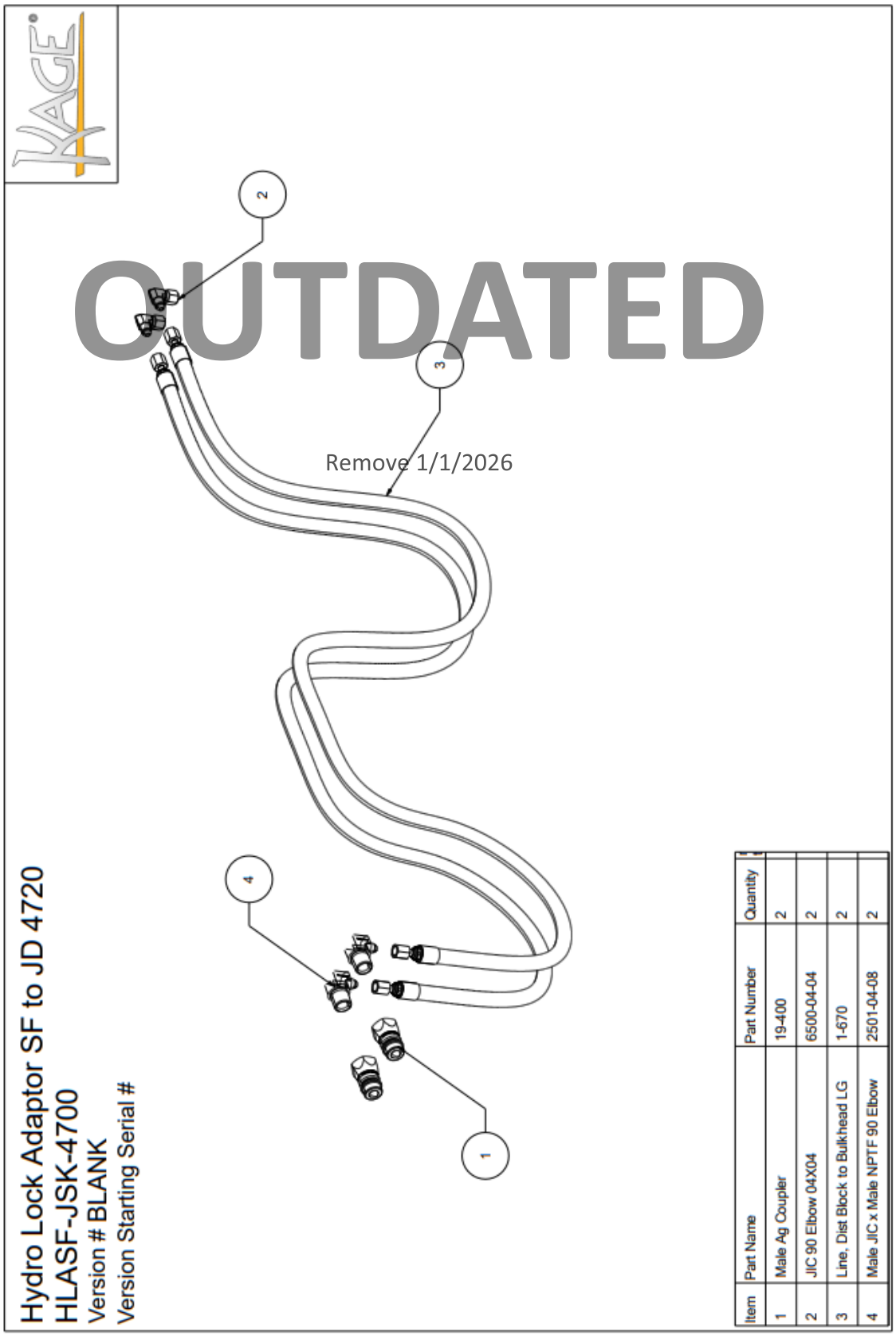

Item	Part Name	Part Number	Quantity
1	Male Ag Coupler	19-400	2
2	JIC 90 Elbow 04X04	6500-04-04	2
3	Line, Dist Block to Bulkhead LG	1-670	2
4	Male JIC x Male NPTF 90 Elbow	2501-04-08	2

Hydro Lock Adaptor SF to KUB L Series
HLASF-KSK-490
Version # BLANK
Version Starting Serial #

OUTDATED

Remove 1/1/2026

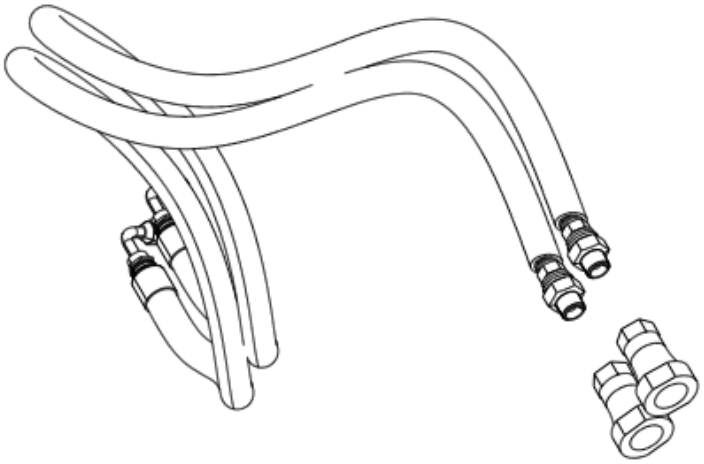

Item	Part Name	Part Number	Quantity	Alibre Part Revision
1	Line, Tractor to Pivot Frame	63-508	2	BLANK
2	Hydro Coupler, Female	G94521-0606	2	BLANK

Weight LBS 20.06

Copyright Kage Innovation All Rights Reserved www.kageinnovation.com (844) 314-KAGE

KAGE™ EXPERIENCE DRIVEN INNOVATION

Hydro Lock Adaptor SF to 3 Point Hitch
HLASF-3P
Version# 2

OUTDATED

Remove 1/1/2026

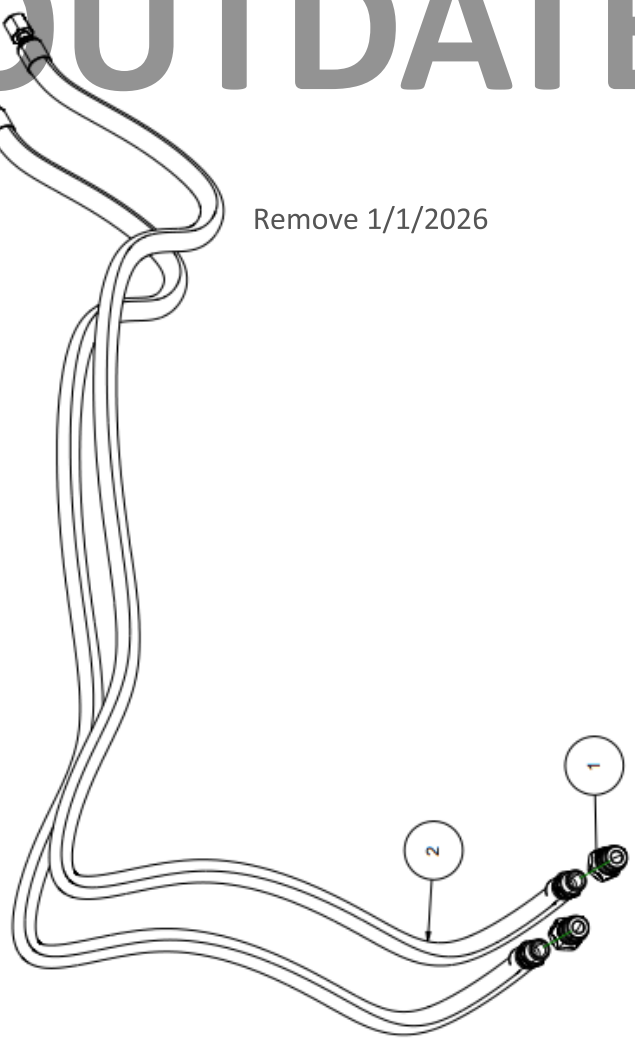

Item Number	Part Name	Part Number	Quantity
1	Male Ag Coupler	19-400	2
2	Line Valve to Dist. Block	1-765	2

Copyright Kage Innovation All Rights Reserved www.kageinnovation.com 651 433 4628

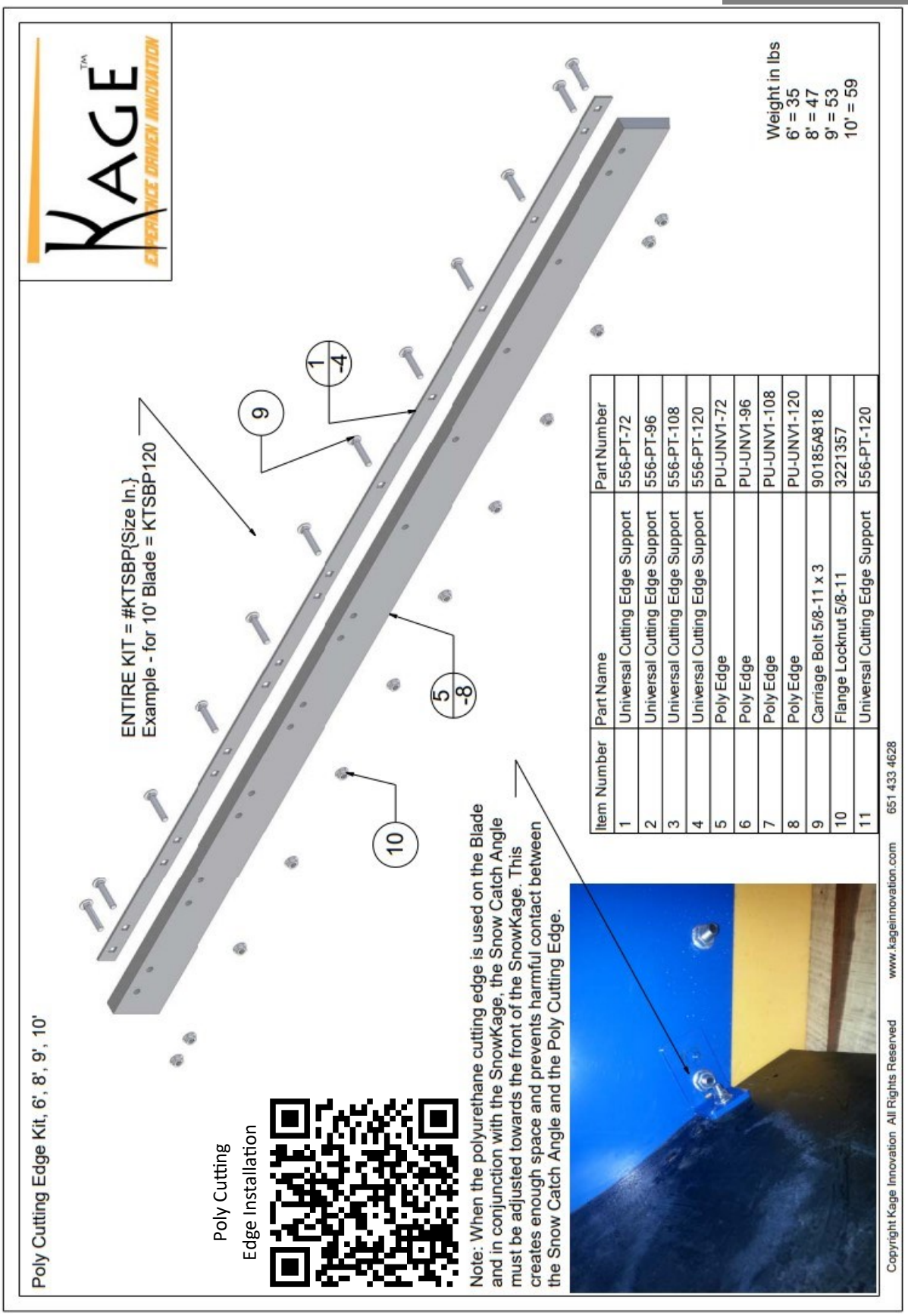

Item Number	Part Name	Part Number
1	Universal Cutting Edge Support	556-PT-72
2	Universal Cutting Edge Support	556-PT-96
3	Universal Cutting Edge Support	556-PT-108
4	Universal Cutting Edge Support	556-PT-120
5	Poly Edge	PU-UNV1-72
6	Poly Edge	PU-UNV1-96
7	Poly Edge	PU-UNV1-108
8	Poly Edge	PU-UNV1-120
9	Carriage Bolt 5/8-11 x 3	90185A818
10	Flange Locknut 5/8-11	3221357
11	Universal Cutting Edge Support	556-PT-120

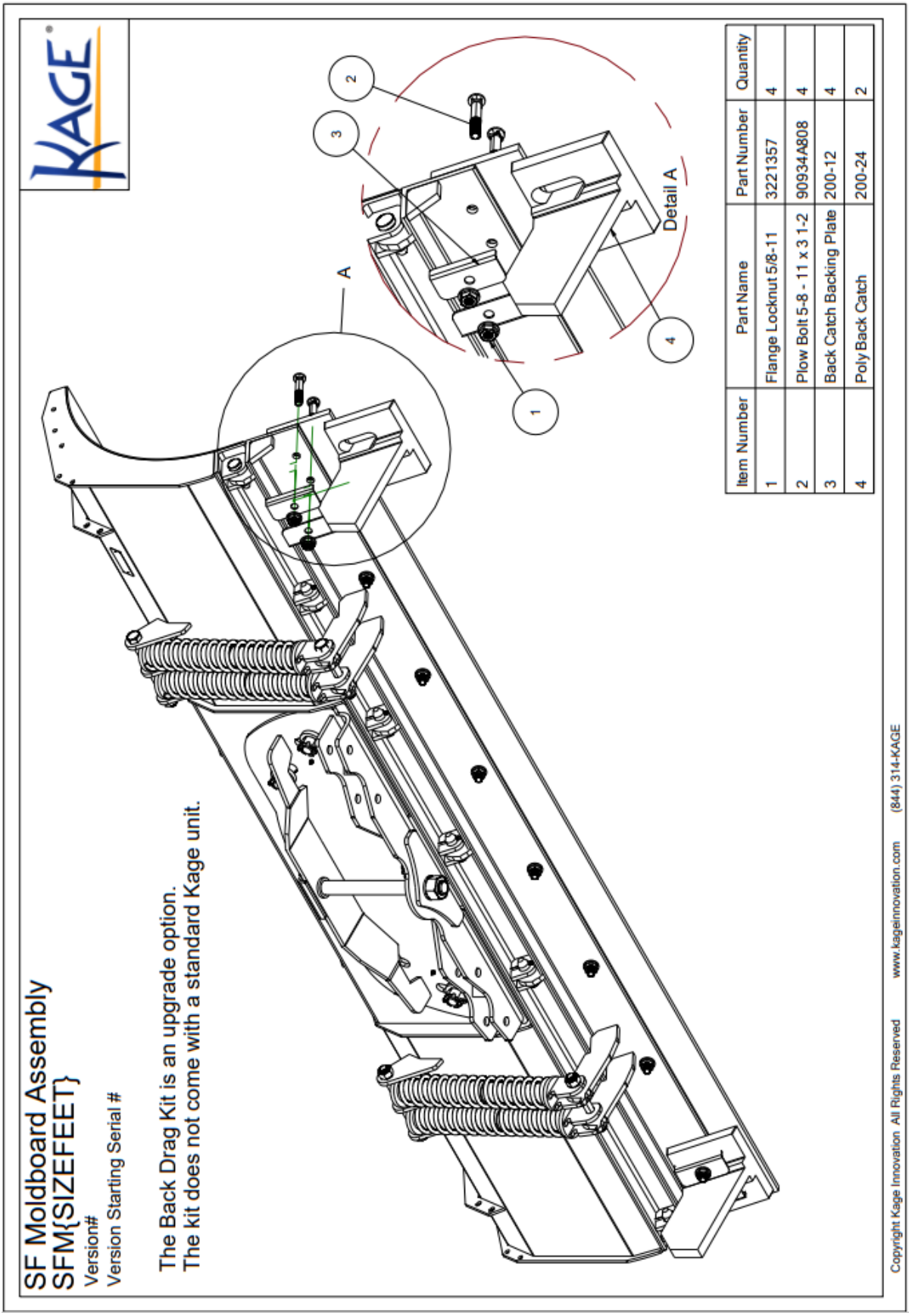

Item Number	Part Name	Part Number	Quantity
1	Flange Locknut 5/8-11	3221357	4
2	Plow Bolt 5-8 - 11 x 3 1-2	90934A808	4
3	Back Catch Backing Plate	200-12	4
4	Poly Back Catch	200-24	2

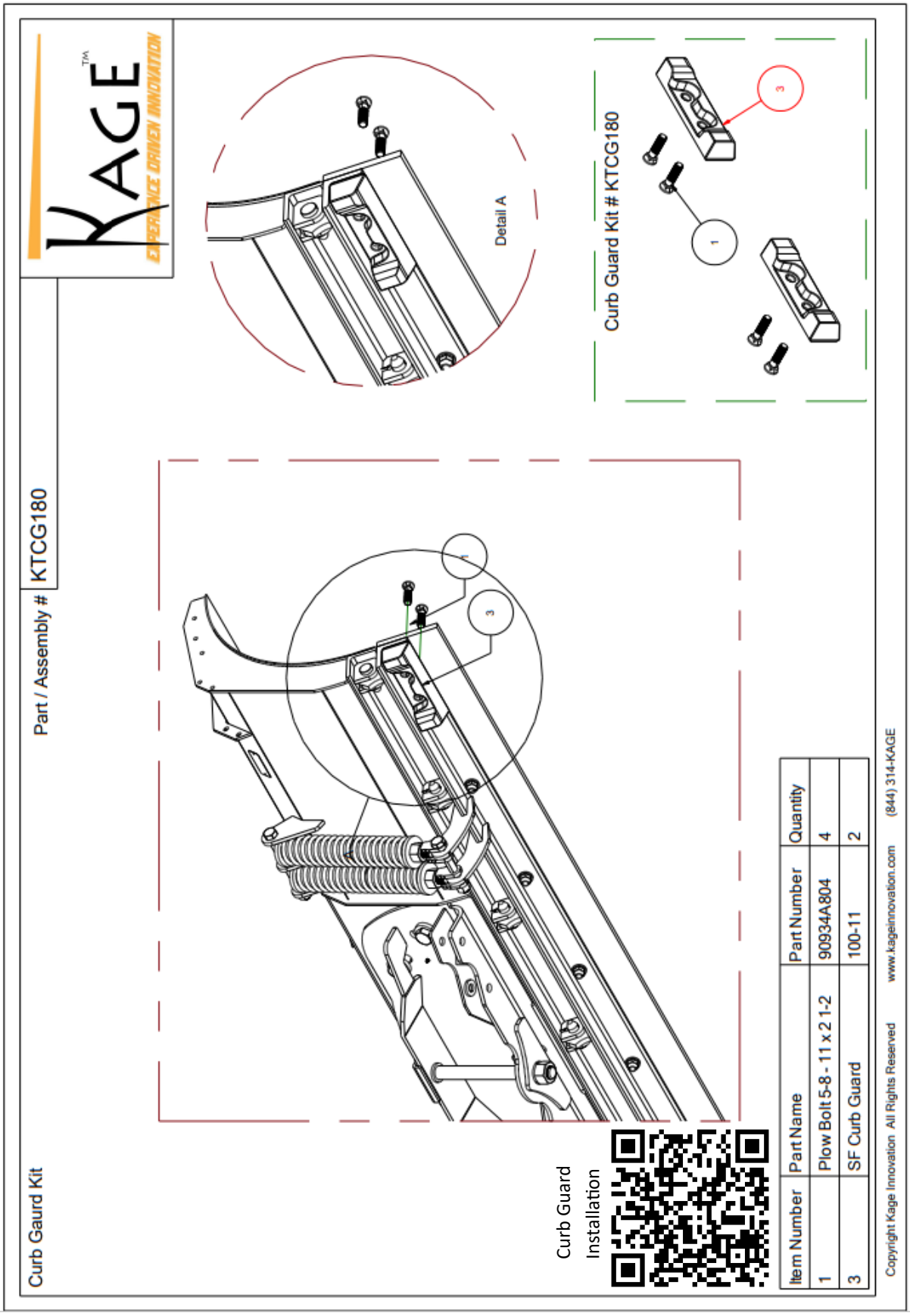
KAGE
EXPERIENCE DRIVEN INNOVATION
Part / Assembly # KTCG180
Curb Gaurd Kit
Detail A
Curb Guard Kit # KTCG180
Curb Guard Installation
Item Number | Part Name | Part Number | Quantity
1 | Plow Bolt 5-8 - 11 x 2 1-2 | 90934A804 | 4
3 | SF Curb Guard | 100-11 | 2
Copyright Kage Innovation All Rights Reserved
www.kageinnovation.com
(844) 314-KAGE

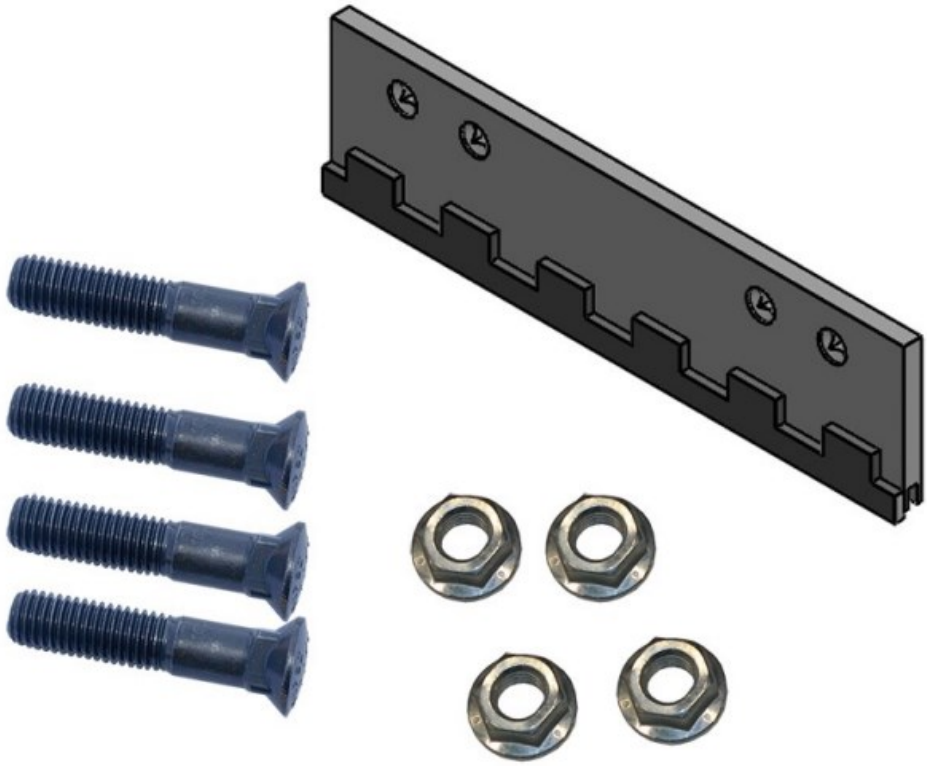

Item	Part Name	Part Number	Quantity	Part Revision
1	Plow Bolt 5/8-11 x 3	90934A806	4	BLANK
2	Flange Locknut 5/8-11	3221357	4	BLANK
3	Kage Blade Centurion 6 x 24	KPG6-24	1	1

Life Extender Installation

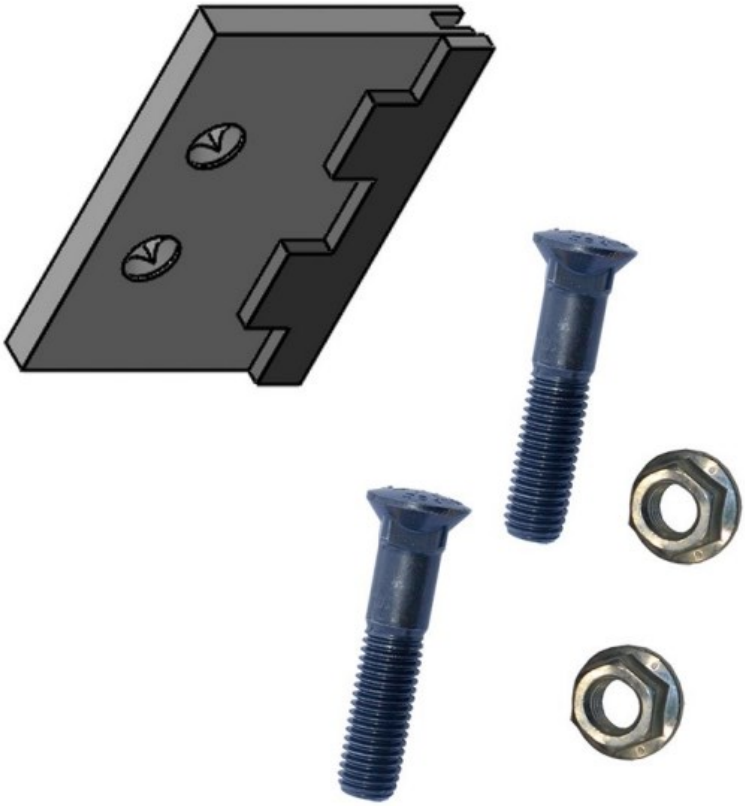

Item	Part Name	Part Number	Quantity	Part Revision
1	Plow Bolt 5/8-11 x 3	90934A806	2	BLANK
2	Flange Locknut 5/8-11	3221357	2	BLANK
3	Kage Blade Centurion 6 x 9	KPG6-9	1	1

Life Extender
Installation

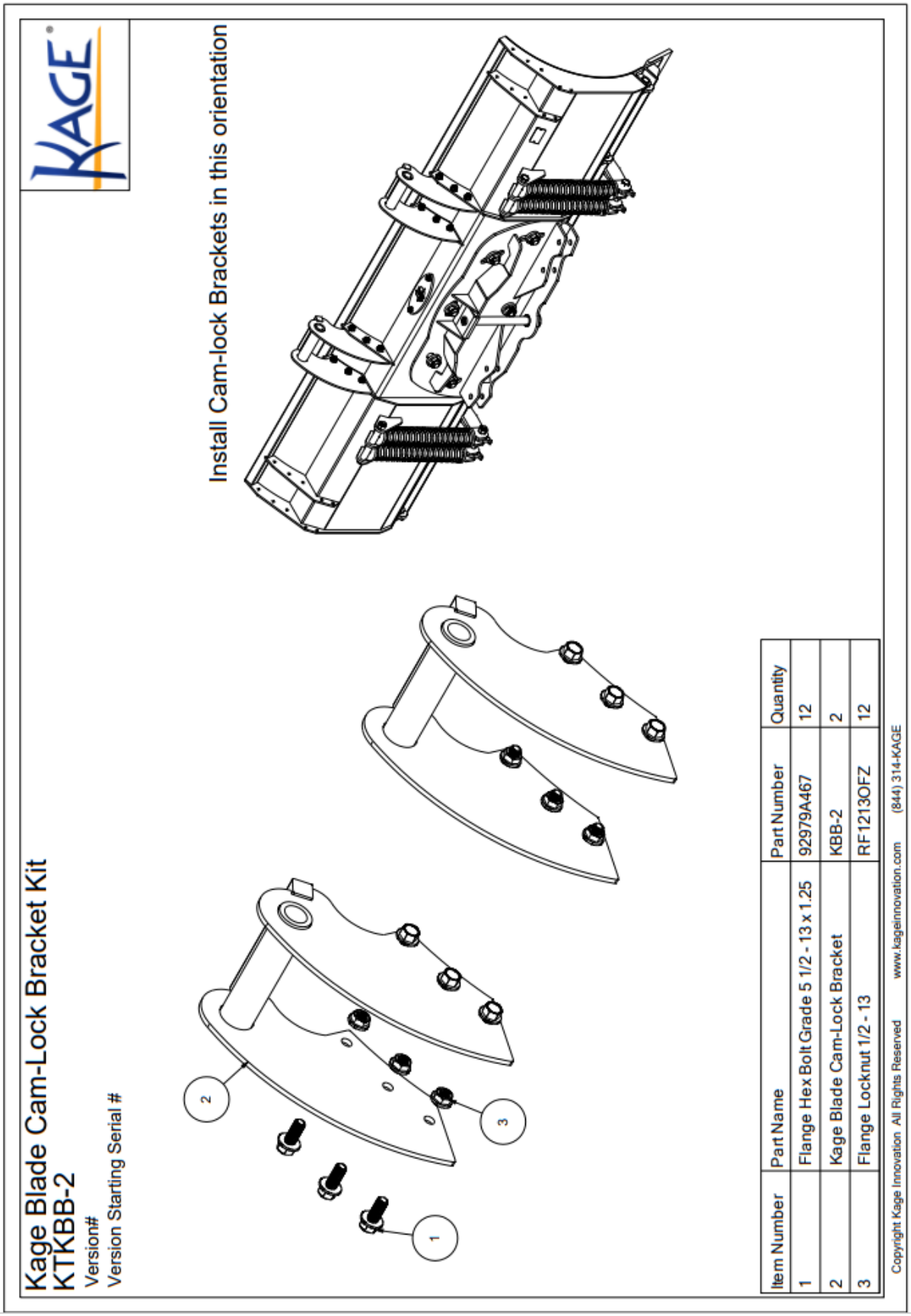
Kage Blade Cam-Lock Bracket Kit
KTKBB-2
Version#
Version Starting Serial #
Install Cam-lock Brackets in this orientation
1
2
3
Item Number | Part Name | Part Number | Quantity
1 | Flange Hex Bolt Grade 5 1/2 - 13 x 1.25 | 92979A467 | 12
2 | Kage Blade Cam-Lock Bracket | KBB-2 | 2
3 | Flange Locknut 1/2 - 13 | RF1213OFZ | 12
Copyright Kage Innovation All Rights Reserved
www.kageinnovation.com
(844) 314-KAGE

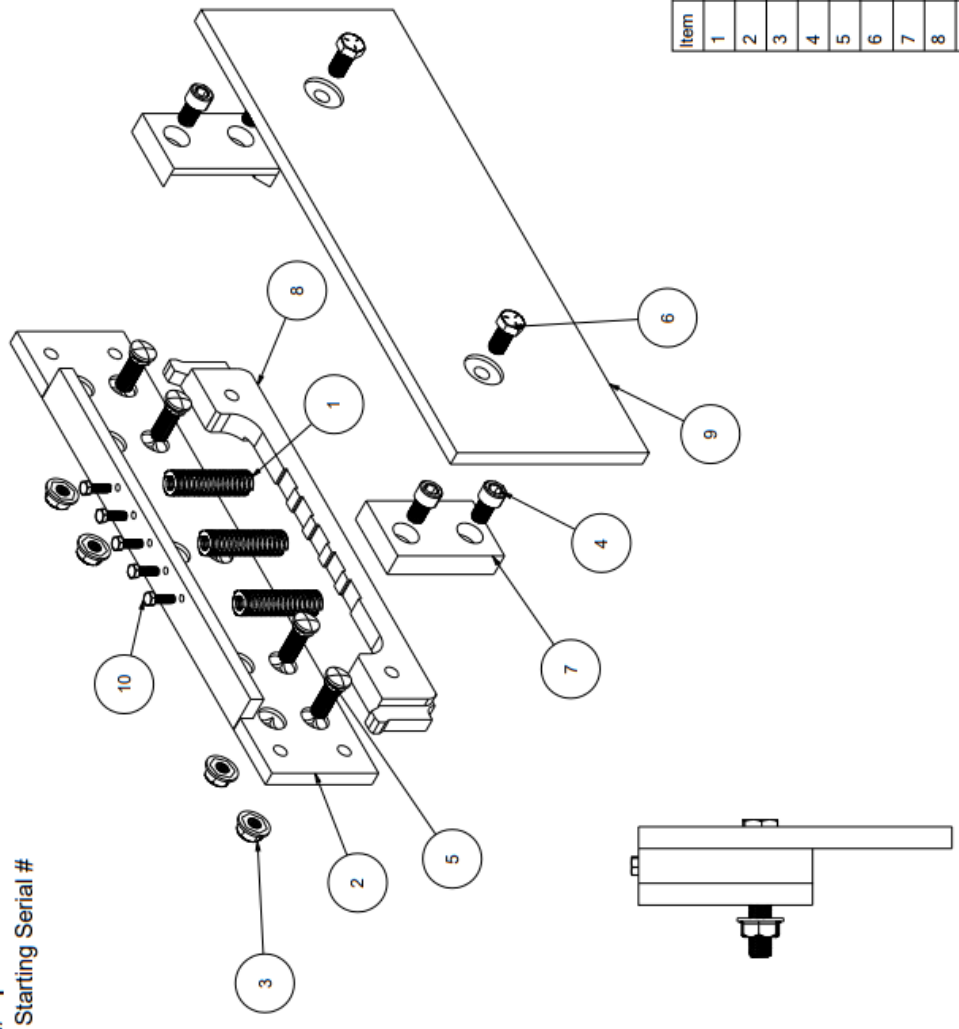

AdvantEdge SF 2 Segment
SF2S
Version# 1
Version Starting Serial #

Item	Part Name	Part Number	Quantity
1	Die Spring 1 x 4	D-1139	3
2	BackPlate 2FT Weldment	FE24	1
3	Flange Locknut 5/8-11	3221357	4
4	Socket Head Screw 5/8-11 x 1	90128A510	4
5	Plow Bolt 5/8-11 x 2"	90934A802	4
6	Hex Bolt GR8 5/8-11 x 1.25	HBZ 063 0125 11	2
7	7SLot	FE107	2
8	SlideBar 24	FE124	1
9	24 Cutting Edge	SBC24FE	1
10	Hex Bolt GR5 5/16-18 x 1	92865A583	5

Copyright Kage Innovation All Rights Reserved www.kageinnovation.com (844) 314-KAGE

Page 15

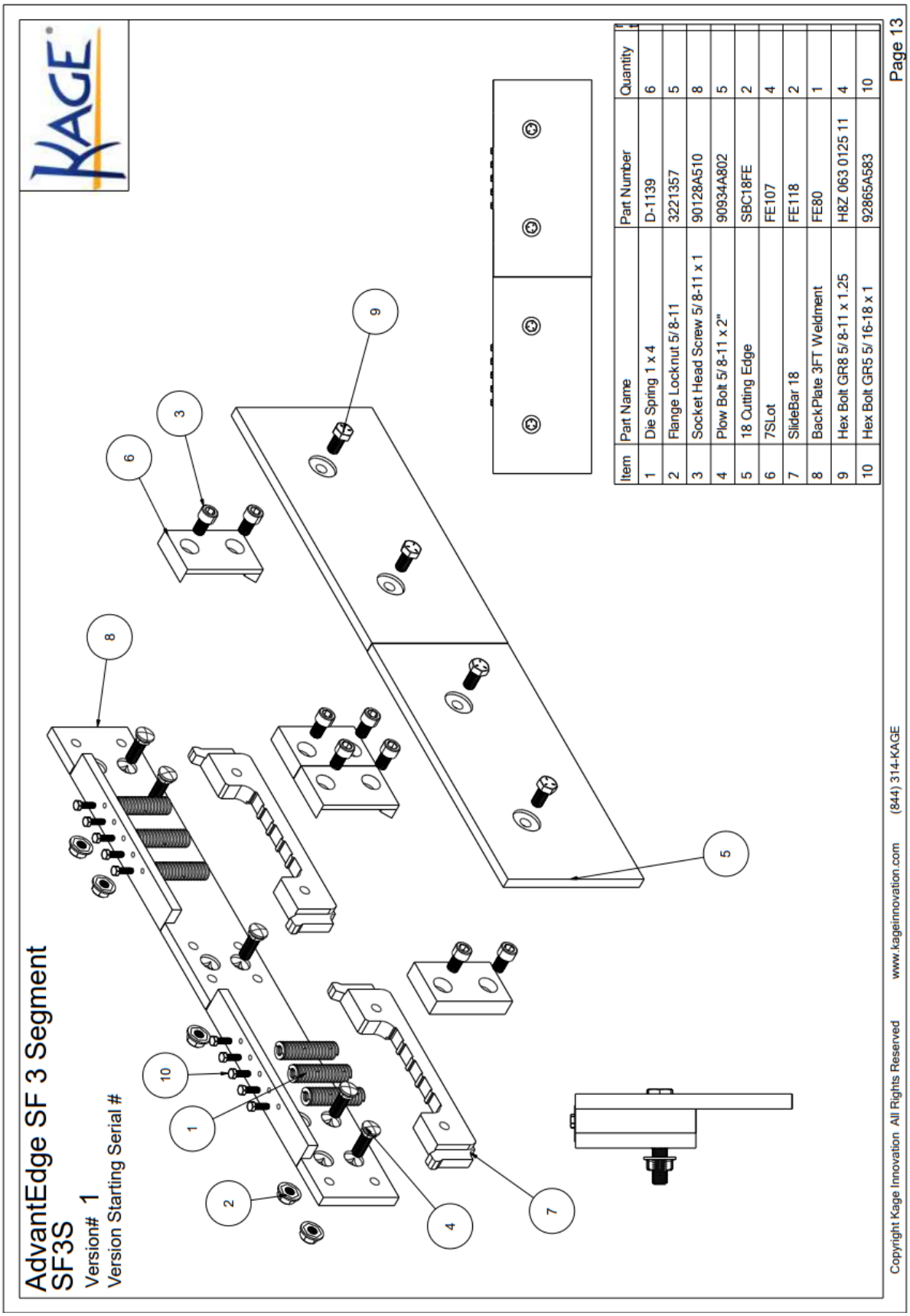

Item	Part Name	Part Number	Quantity
1	Die Spring 1 x 4	D-1139	6
2	Flange Locknut 5/ 8-11	3221357	5
3	Socket Head Screw 5/ 8-11 x 1	90128A510	8
4	Plow Bolt 5/ 8-11 x 2"	90934A802	5
5	18 Cutting Edge	SBC18FE	2
6	7SLot	FE107	4
7	SlideBar 18	FE118	2
8	BackPlate 3FT Weldment	FE80	1
9	Hex Bolt GR8 5/ 8-11 x 1.25	H8Z 063 0125 11	4
10	Hex Bolt GR5 5/ 16-18 x 1	92865A583	10

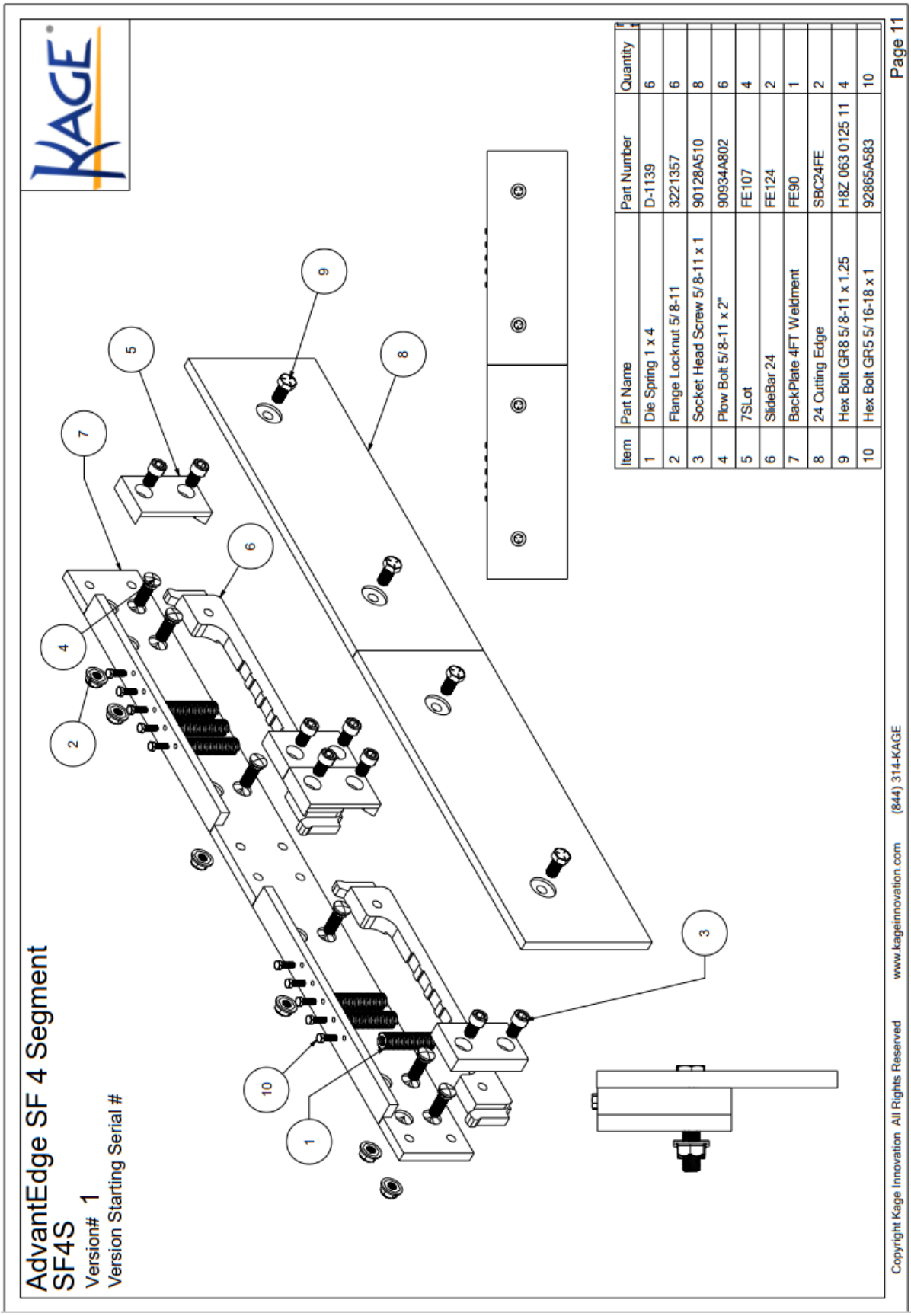

Item	Part Name	Part Number	Quantity
1	Die Spring 1 x 4	D-1139	6
2	Flange Locknut 5/8-11	3221357	6
3	Socket Head Screw 5/8-11 x 1	90128A510	8
4	Plow Bolt 5/8-11 x 2"	90934A802	6
5	7SLot	FE107	4
6	SlideBar 24	FE124	2
7	BackPlate 4FT Weldment	FE90	1
8	24 Cutting Edge	SBC24FE	2
9	Hex Bolt GR8 5/8-11 x 1.25	H8Z 063 0125 11	4
10	Hex Bolt GR5 5/16-18 x 1	92865A583	10

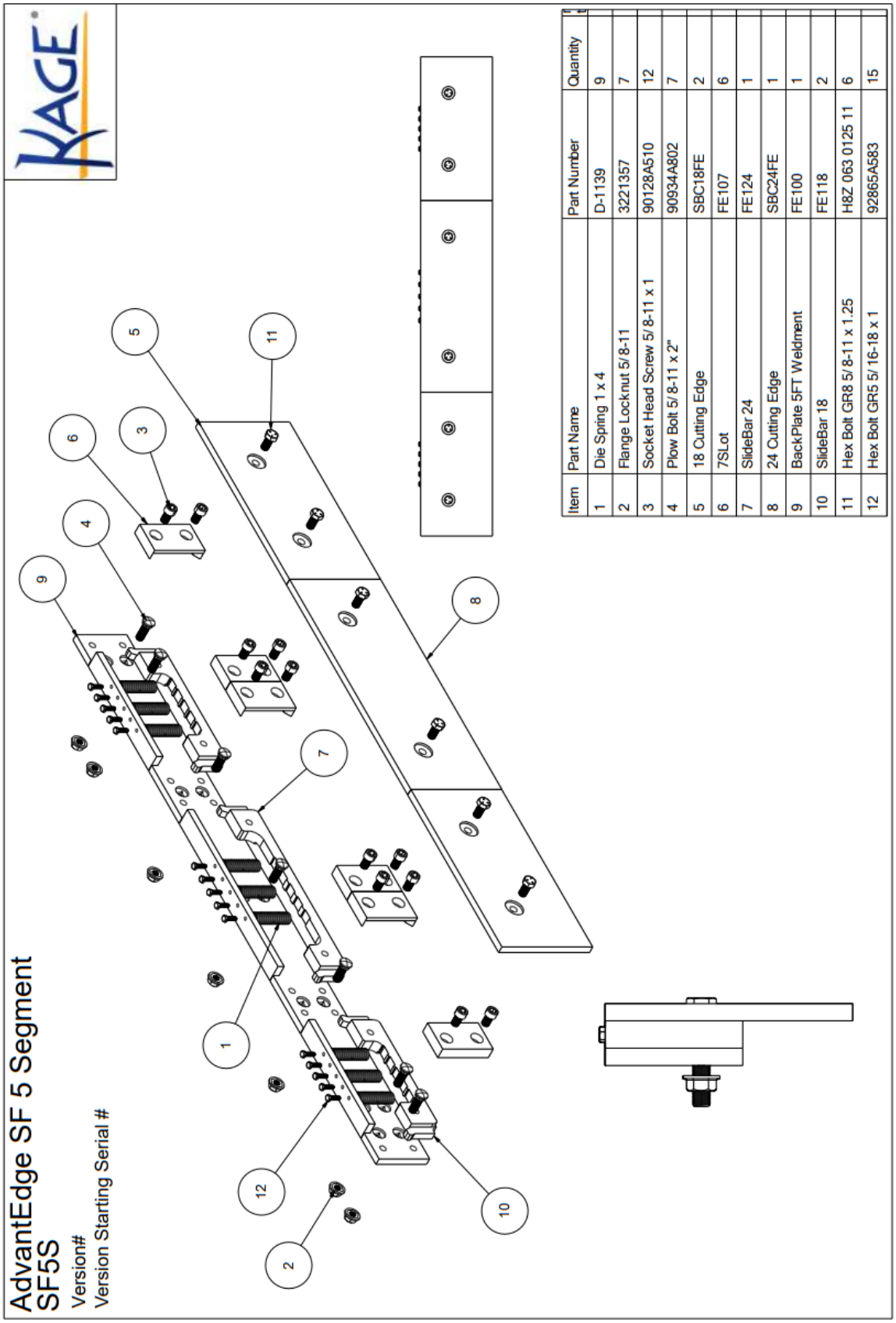

Item	Part Name	Part Number	Quantity
1	Die Spring 1 x 4	D-1139	9
2	Flange Locknut 5/ 8-11	3221357	7
3	Socket Head Screw 5/ 8-11 x 1	90128A510	12
4	Plow Bolt 5/ 8-11 x 2"	90934A802	7
5	18 Cutting Edge	SBC18FE	2
6	7SLot	FE107	6
7	SlideBar 24	FE124	1
8	24 Cutting Edge	SBC24FE	1
9	BackPlate 5FT Weldment	FE100	1
10	SlideBar 18	FE118	2
11	Hex Bolt GR8 5/ 8-11 x 1.25	H8Z 063 0125 11	6
12	Hex Bolt GR5 5/ 16-18 x 1	92865A583	15

Copyright Kage Innovation All Rights Reserved www.kageinnovation.com (844) 314-KAGE

Page 9

SF2011 Tractor SnowKage Assembly Complete
SK2011-{Nominal Size Inches}

Version# 5

Use this break down when ordering parts if your Kage's serial # is lower than; SK2011 124-10999

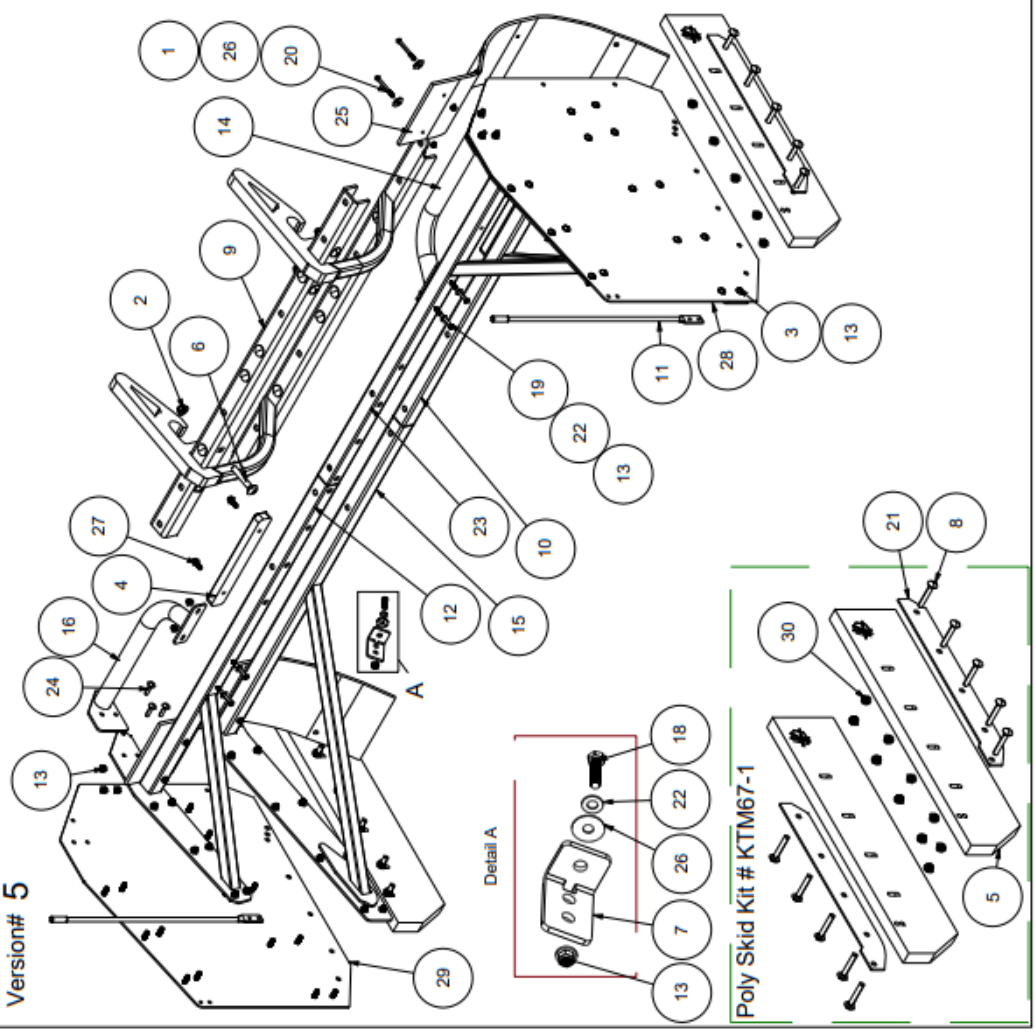

Item	Part Name	Part Number	Qty
1	Flange Locknut 5/16-18	92018A320	6
2	Flange Locknut 5/8-11	3221357	12
3	Carriage Bolt GR5, 3/8 - 16 * 1	ROC-2131-624	32
4	Isolator	N24-2	2
5	Poly Skid	N36-2	2
6	Carriage Bolt, 5/8-11 x 3.5"	90185A822	12
7	Snow Catch Angle	223-2R	2
8	Carriage Bolt GR5 1/2-13 x 3	ROC-2131-724	10
9	Center Group	100-504	1
10	BDS Weldment	BDS-1	1
11	Plow Guide	W-1578	2
12	TPS Weldment	TPS-1	1
13	Flange Locknut, 3/8 -16	93298A130	44
14	Tractor Tube, Driver	567-Driver	1
15	BPS Weldment	BPS-1	1
16	Tractor Tube, Passenger	567-Passenger	1
17	Name Plate	KAGE001-11399-2	1
18	Hex Bolt GR5 3/8-16 x 1.5	92865A628	2
19	Hex Bolt GR5 3/8-16 x 3	91257A636	4
20	Hex Bolt, 5/16 - 18 x 3	91247A595	6
21	Poly Support	022-2	2
22	Flat Washer, 3_8	ROC-8071-031	6
23	TDS Weldment	TDS-1	1
24	Carriage Bolt GR5 3/8-16 x 1.25	ROC-2131-626	6
25	Snow Catch	N42-2	2
26	Fender Washer, 3/8	91090A121	8
27	Flange Hex Bolt, 3/8 - 16 x 1	92979A344	4
28	Side Panel Driver	363-2-D	1
29	Side Panel Passenger	363-2-P	1
30	Flange Locknut 1/2 - 13	RF1213OFZ	10

Copyright Kage Innovation All Rights Reserved www.kageinnovation.com 651 433 4628

SnowKage Assembly Complete 12
SK2011-144

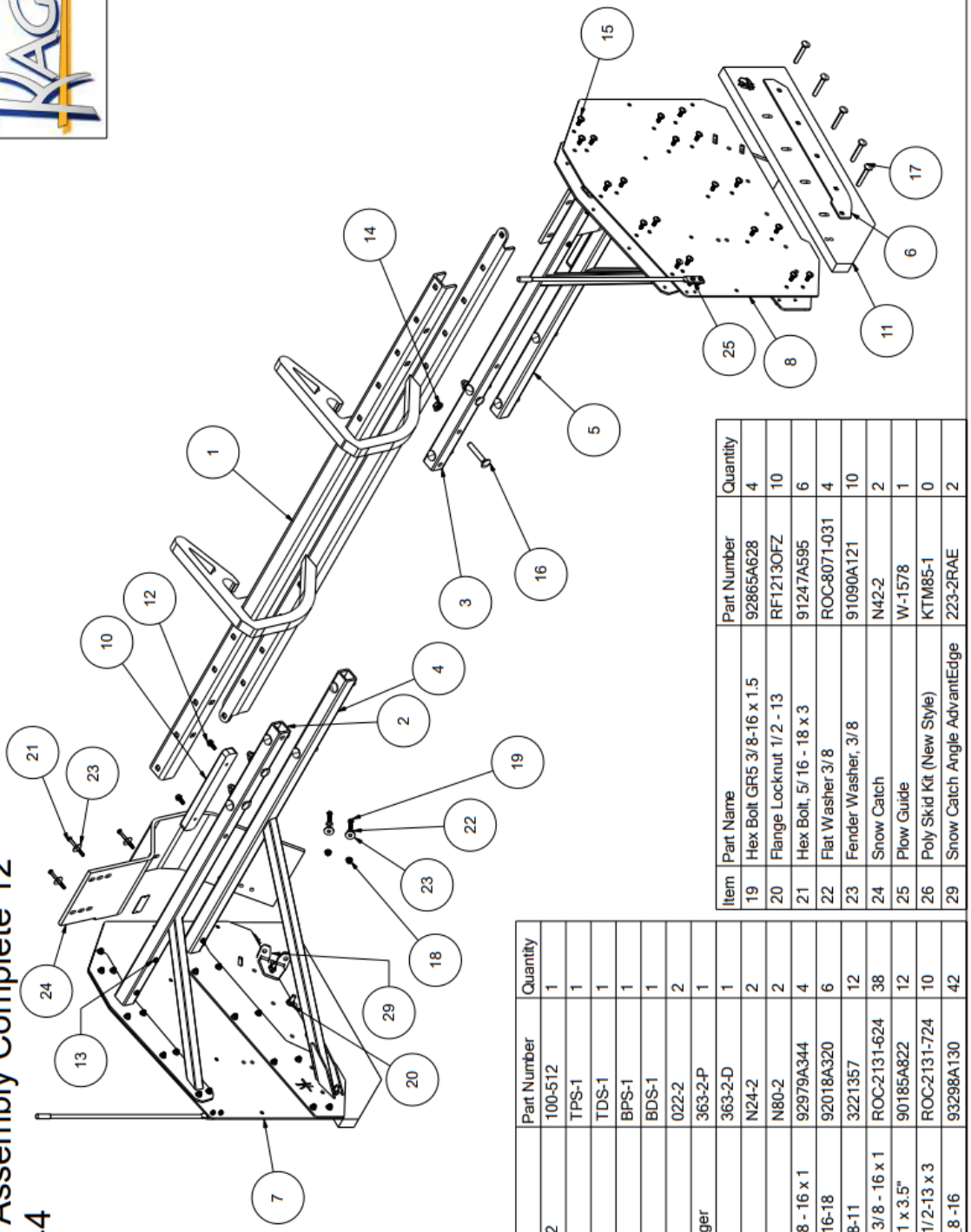

Item	Part Name	Part Number	Quantity
1	SF Center Group 12	100-512	1
2	TPS Weldment	TPS-1	1
3	TDS Weldment	TDS-1	1
4	BPS Weldment	BPS-1	1
5	BDS Weldment	BDS-1	1
6	Poly Support	022-2	2
7	Side Panel Passenger	363-2-P	1
8	Side Panel Driver	363-2-D	1
10	Isolator	N24-2	2
11	Poly Skid T	N80-2	2
12	Flange Hex Bolt 3/ 8 - 16 x 1	92979A344	4
13	Flange Locknut 5/ 16-18	92018A320	6
14	Flange Locknut 5/ 8-11	3221357	12
15	Carriage Bolt GR5, 3/ 8 - 16 x 1	ROC2131-624	38
16	Carriage Bolt 5/ 8-11 x 3.5"	90185A822	12
17	Carriage Bolt GR5 1/ 2-13 x 3	ROC2131-724	10
18	Flange Locknut, 3_8 -16	93298A130	42

Item	Part Name	Part Number	Quantity
19	Hex Bolt GR5 3/ 8-16 x 1.5	92865A628	4
20	Flange Locknut 1/ 2 - 13	RF1213OFZ	10
21	Hex Bolt, 5/ 16 - 18 x 3	91247A595	6
22	Flat Washer 3/ 8	ROC-8071-031	4
23	Fender Washer, 3/ 8	91090A121	10
24	Snow Catch	N42-2	2
25	Plow Guide	W-1578	1
26	Poly Skid Kit (New Style)	KTM85-1	0
29	Snow Catch Angle AdvantEdge	223-2RAE	2

Copyright Kage Innovation All Rights Reserved www.kageinnovation.com (844) 314-KAGE

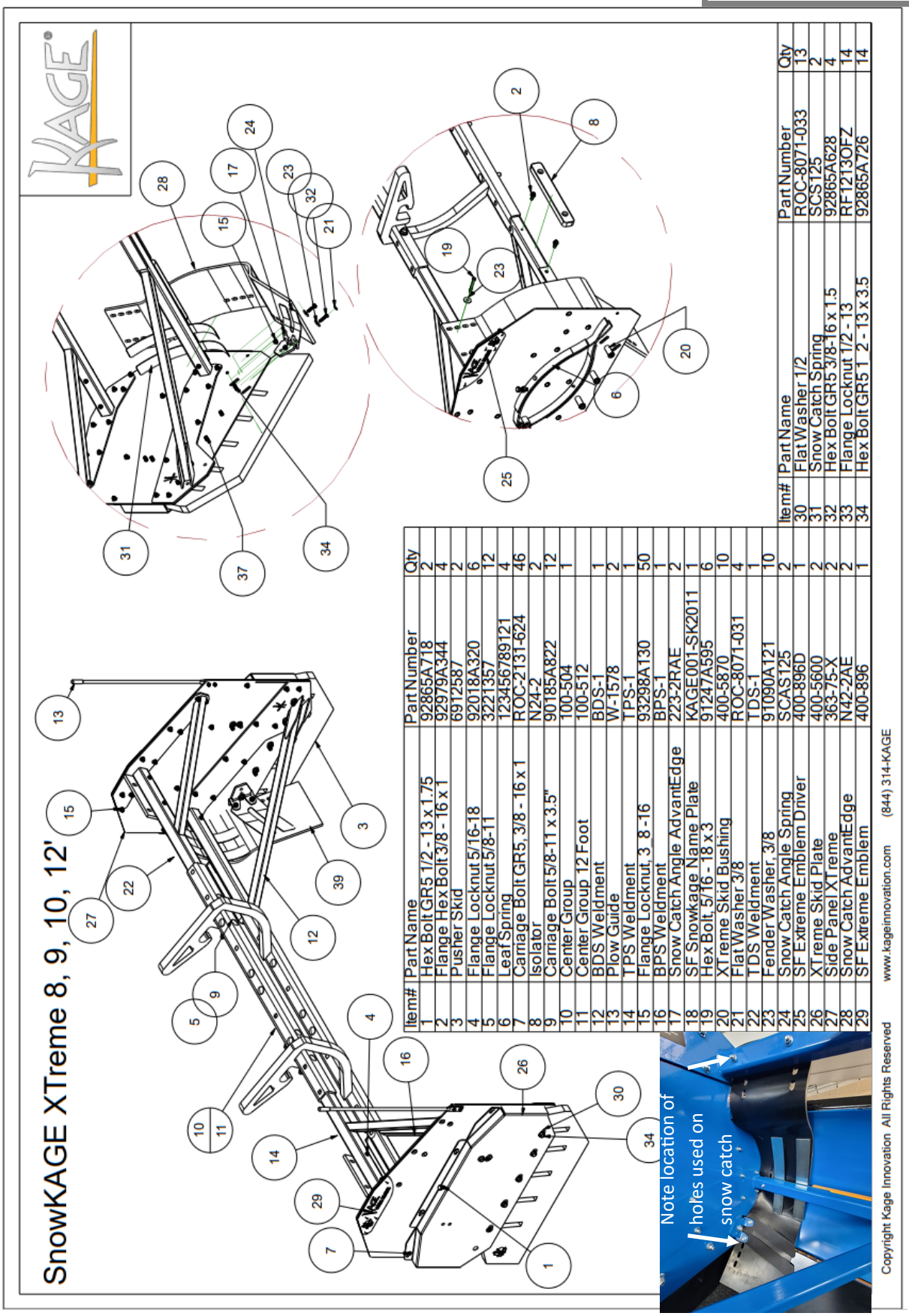

Item#	Part Name	Part Number	Qty
1	Hex Bolt GR5 1/2 - 13 x 1.75	92865A718	2
2	Flange Hex Bolt 3/8 - 16 x 1	92979A344	4
3	Pusher Skid	6912587	2
4	Flange Locknut 5/16-18	92018A320	6
5	Flange Locknut 5/8-11	3221357	12
6	Leaf Spring	123456789121	4
7	Carriage Bolt GR5, 3/8 - 16 x 1	ROC-2131-624	46
8	Isolator	N24-2	2
9	Carriage Bolt 5/8-11 x 3.5"	90185A822	12
10	Center Group	100-504	1
11	Center Group 12 Foot	100-512	
12	BDS Weldment	BDS-1	1
13	Plow Guide	W-1578	2
14	TPS Weldment	TPS-1	1
15	Flange Locknut, 3 8 -16	93298A130	50
16	BPS Weldment	BPS-1	1
17	Snow Catch Angle AdvantEdge	223-2RAE	2
18	SF Snowkage Name Plate	KAGE001-SK2011	1
19	Hex Bolt, 5/16 - 18 x 3	91247A595	6
20	XTreme Skid Bushing	400-5870	10
21	Flat Washer 3/8	ROC-8071-031	4
22	TDS Weldment	TDS-1	1
23	Fender Washer, 3/8	91090A121	10
24	Snow Catch Angle Spring	SCAS125	2
25	SF Extreme Emblem Driver	400-896D	1
26	XTreme Skid Plate	400-5600	2
27	Side Panel XTreme	363-75-X	2
28	Snow Catch AdvantEdge	N42-2AE	2
29	SF Extreme Emblem	400-896	1

Item#	Part Name	Part Number	Qty
30	Flat Washer 1/2	ROC-8071-033	13
31	Snow Catch Spring	SCS125	2
32	Hex Bolt GR5 3/8-16 x 1.5	92865A628	4
33	Flange Locknut 1/2 - 13	RF1213OFZ	14
34	Hex Bolt GR5 1 2 - 13 x 3.5	92865A726	14

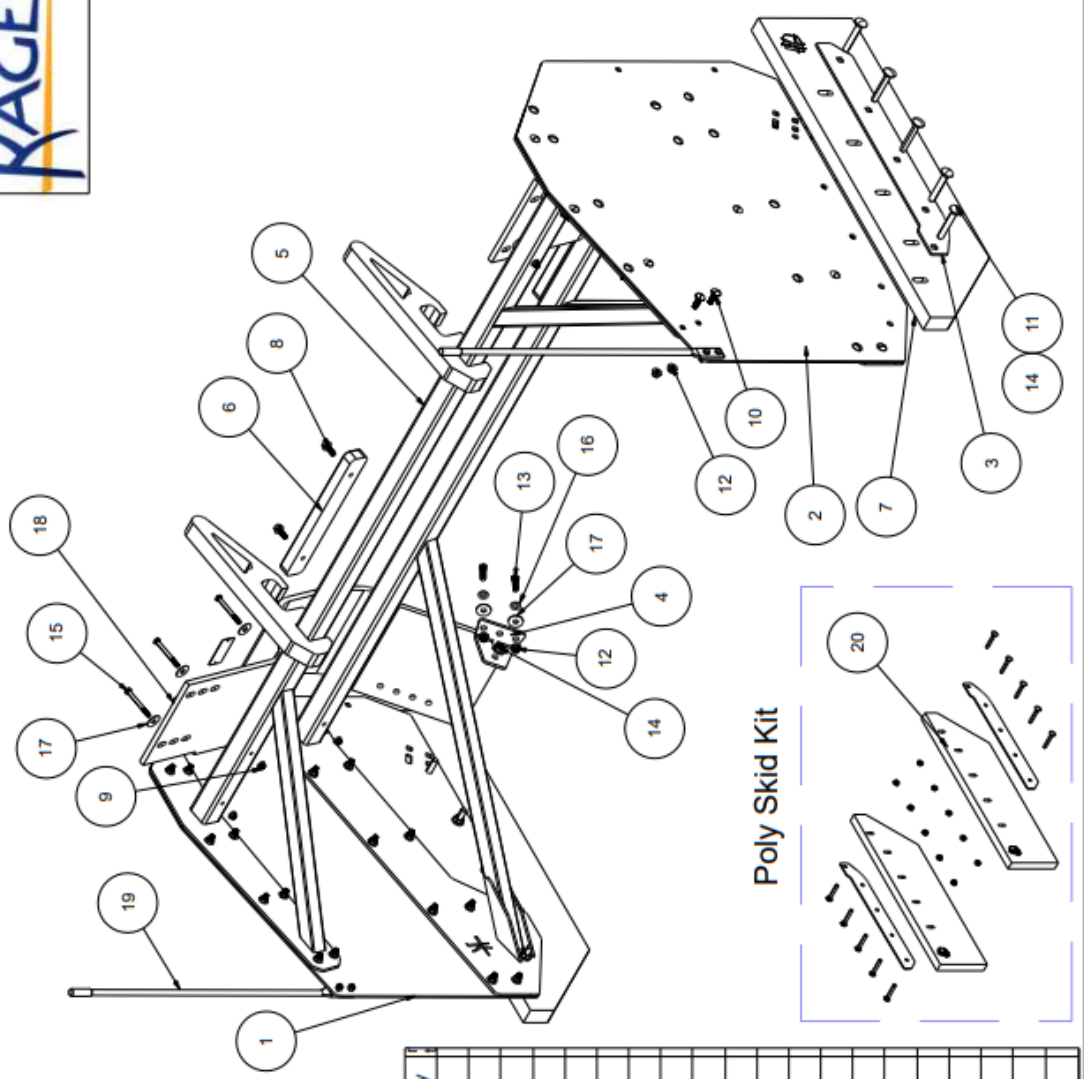

SnowKage Assembly Complete 6
SK72

Version# 2017

Version Starting Serial #

Item	Part Name	Part Number	Quantity
1	Side Panel Passenger	363-2-P	1
2	Side Panel Driver	363-2-D	1
3	Poly Support	022-2	2
4	Snow Catch Angle	223-2R	2
5	SnowKage Frame 72	SKFRAME72	1
6	Isolator	N24-2	2
7	Poly Skid T	N80-2	2
8	Flange Hex Bolt 3/ 8 - 16 x 1	92979A344	4
9	Flange Locknut 5/ 16-18	92018A320	6
10	Carriage Bolt GR5, 3/ 8 - 16 x 1	ROC-2131-624	38
11	Carriage Bolt GR5 1/ 2-13 x 3	ROC-2131-724	10
12	Flange Locknut, 3/ 8 -16	93298A130	42
13	Hex Bolt GR5 3/ 8-16 x 1.5	92865A628	4
14	Flange Locknut 1/ 2 - 13	RF1213OFZ	10
15	Hex Bolt, 5/ 16 - 18 x 3	91247A595	6
16	Flat Washer, 3/ 8	ROC-8071-031	4
17	Fender Washer, 3/ 8	91090A121	10
18	Snow Catch	N42-2	2
19	Plow Guide	W-1578	1
20	Poly Skid Kit (New Style)	KTM85-1	0

WEIGHT LBS **359.20**

Copyright Kage Innovation All Rights Reserved www.kageinnovation.com (844) 314-KAGE

SnowFire XTreme System 8, 9, 10, 12 Foot. SBK & LBK pivot frame options

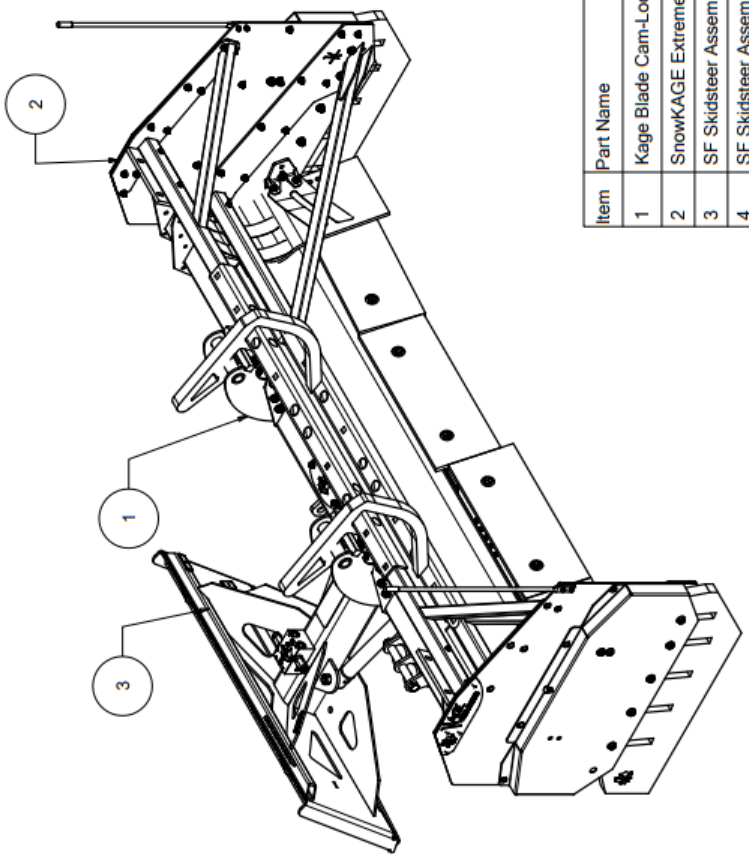

Item	Part Name	Part Number	QTY
1	Kage Blade Cam-Lock Bracket Kit	KTKBB-2	1
2	SnowKAGE Extreme 2024	SK2011-{Nominal SIZE Inches}	1
3	SF Skidsteer Assembly W/ AdvantEdge 8	SB96	
4	SF Skidsteer Assembly W/ AdvantEdge 9	SB108	
5	SF Skidsteer Assembly W/ AdvantEdge 10	SB120	
6	SF Skidsteer Assembly W/ AdvantEdge 12	SB144	
7	LB Compact Loader Assembly W/ AdvantEdge 9	LB108	
8	LB Compact Loader Assembly W/ AdvantEdge 10	LB120	
9	LB Compact Loader Assembly W/ AdvantEdge 12	LB144	

Copyright Kage Innovation All Rights Reserved www.kageinnovation.com (844) 314-KAGE

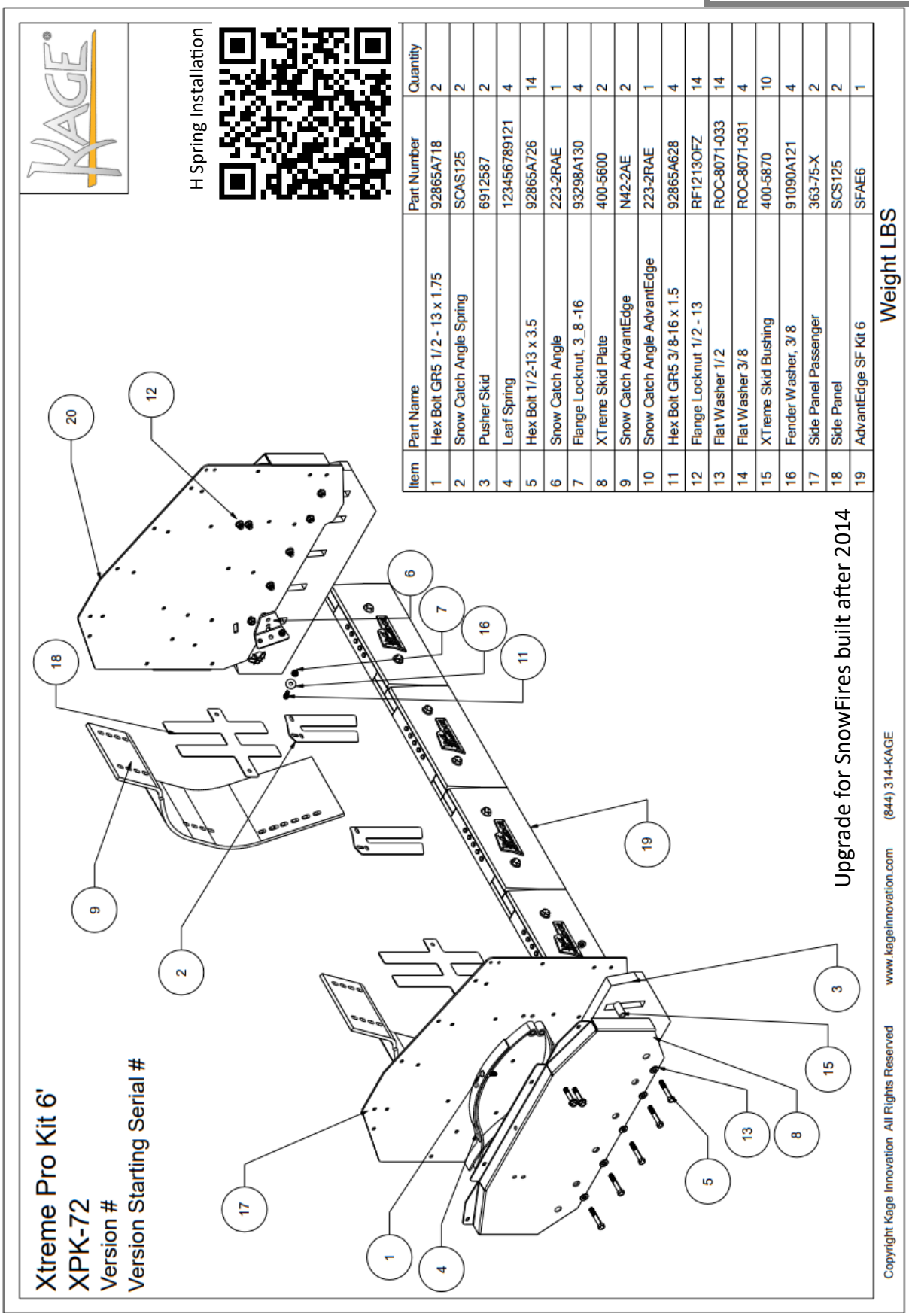

Item	Part Name	Part Number	Quantity
1	Hex Bolt GR5 1/2 - 13 x 1.75	92865A718	2
2	Snow Catch Angle Spring	SCAS125	2
3	Pusher Skid	6912587	2
4	Leaf Spring	123456789121	4
5	Hex Bolt 1/2-13 x 3.5	92865A726	14
6	Snow Catch Angle	223-2RAE	1
7	Flange Locknut, 3_8 -16	93298A130	4
8	XTreme Skid Plate	400-5600	2
9	Snow Catch AdvantEdge	N42-2AE	2
10	Snow Catch Angle AdvantEdge	223-2RAE	1
11	Hex Bolt GR5 3/8-16 x 1.5	92865A628	4
12	Flange Locknut 1/2 - 13	RF1213OFZ	14
13	Flat Washer 1/2	ROC-8071-033	14
14	Flat Washer 3/8	ROC-8071-031	4
15	XTreme Skid Bushing	400-5870	10
16	Fender Washer, 3/8	91090A121	4
17	Side Panel Passenger	363-75-X	2
18	Side Panel	SCS125	2
19	AdvantEdge SF Kit 6	SFAE6	1

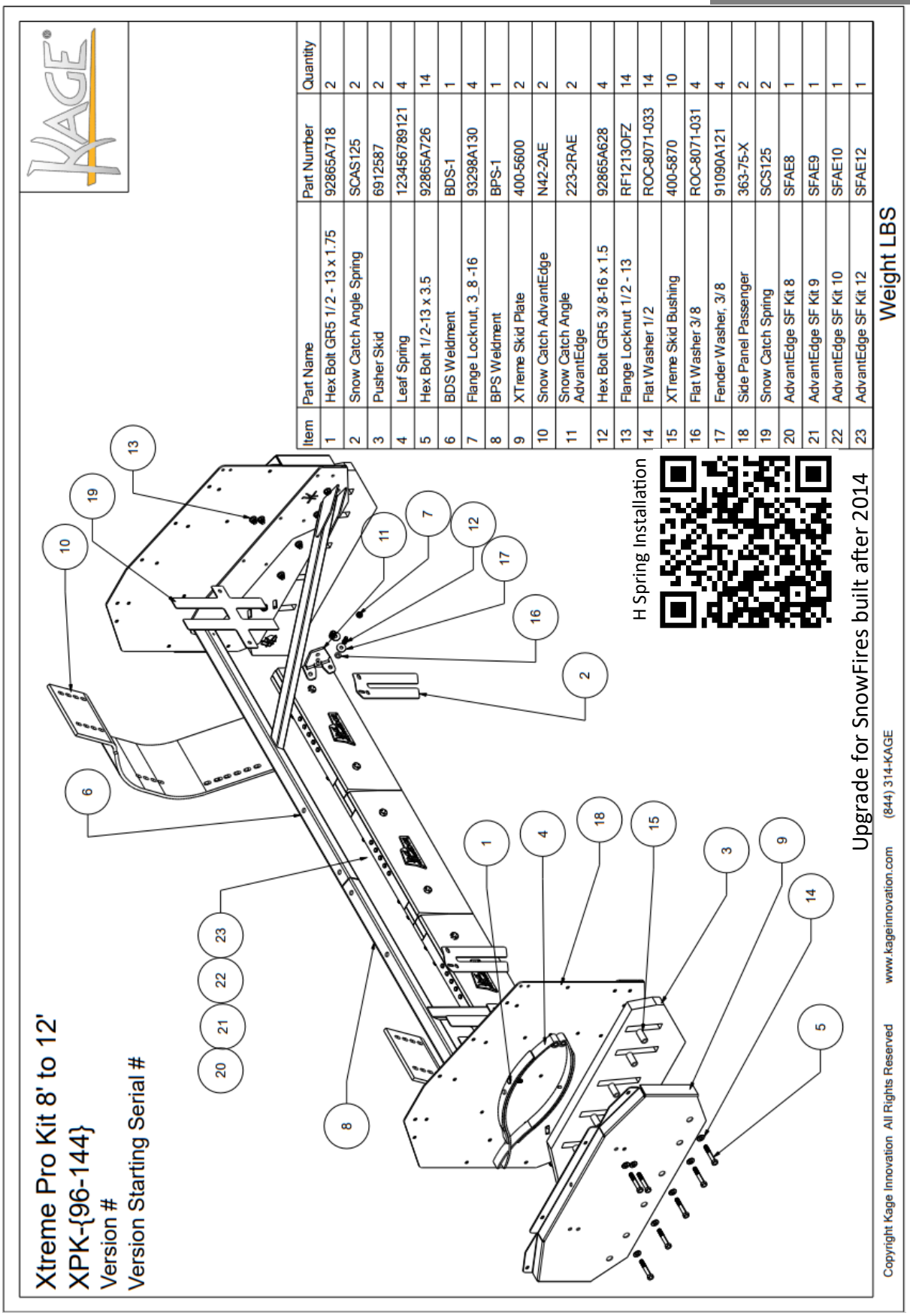

Item	Part Name	Part Number	Quantity
1	Hex Bolt GR5 1/2 - 13 x 1.75	92865A718	2
2	Snow Catch Angle Spring	SCAS125	2
3	Pusher Skid	6912587	2
4	Leaf Spring	123456789121	4
5	Hex Bolt 1/2-13 x 3.5	92865A726	14
6	BDS Weldment	BDS-1	1
7	Flange Locknut, 3_8 -16	93298A130	4
8	BPS Weldment	BPS-1	1
9	XTreme Skid Plate	400-5600	2
10	Snow Catch AdvantEdge	N42-2AE	2
11	Snow Catch Angle AdvantEdge	223-2RAE	2
12	Hex Bolt GR5 3/ 8-16 x 1.5	92865A628	4
13	Flange Locknut 1/2 - 13	RF1213OFZ	14
14	Flat Washer 1/2	ROC-8071-033	14
15	XTreme Skid Bushing	400-5870	10
16	Flat Washer 3/ 8	ROC-8071-031	4
17	Fender Washer, 3/ 8	91090A121	4
18	Side Panel Passenger	363-75-X	2
19	Snow Catch Spring	SCS125	2
20	AdvantEdge SF Kit 8	SFAE8	1
21	AdvantEdge SF Kit 9	SFAE9	1
22	AdvantEdge SF Kit 10	SFAE10	1
23	AdvantEdge SF Kit 12	SFAE12	1

TBK (Tractor - Blade & SnowKAGE) 6, 8, 9, 10 Foot Systems

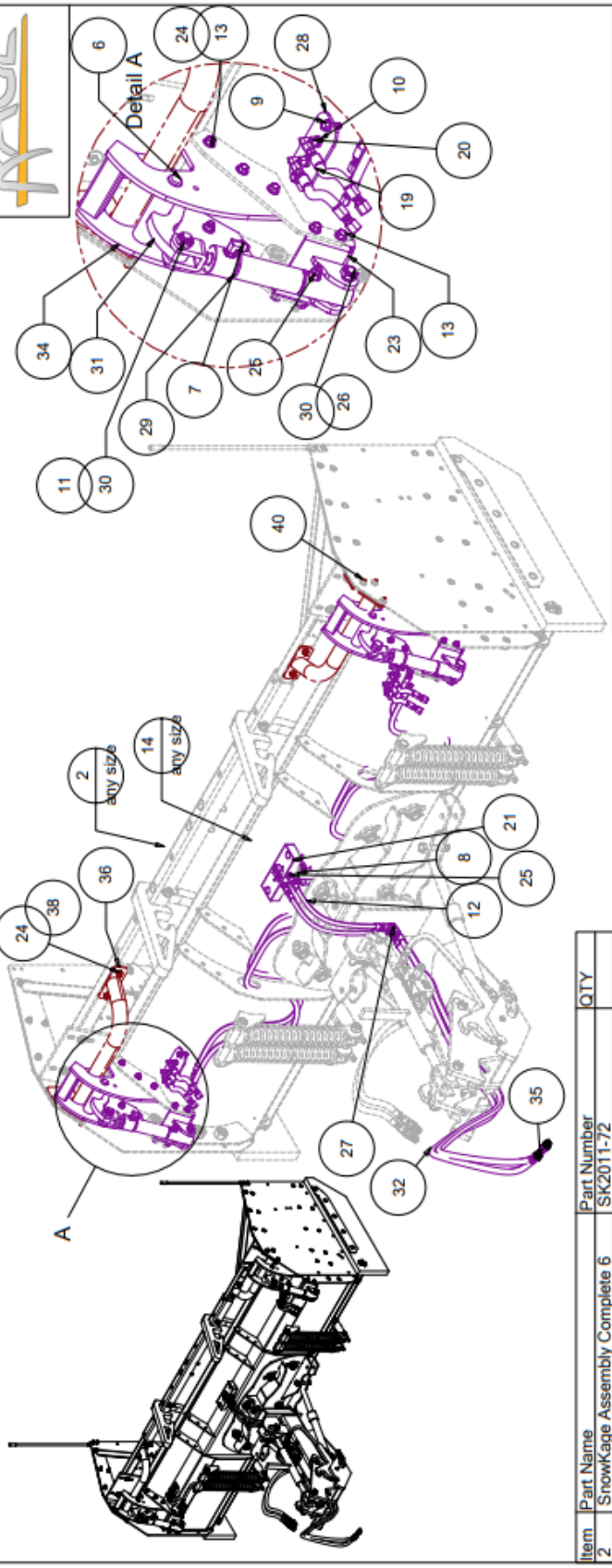

Item	Part Name	Part Number	QTY
2	SnowKage Assembly Complete 6	SK2011-72	
3	SnowKage Assembly Complete 8	SK2011-96	
4	SnowKage Assembly Complete 9	SK2011-108	
5	SnowKage Assembly Complete 10	SK2011-120	
6	PIN GROUP	44	2
7	JIC x ORB Elbow Adapter	6801-NWO-06-06	2
8	JIC - Oring 04x06	6400-0-04-06	4
9	Flange Hex Bolt 3/8 - 16 x 1	92979A344	4
10	JIC Bulkhead 04x04	2700-04-04	4
11	Hex Bolt GR5 3/4-10 x 2.25	92865A844	2
12	Hydro Line 16.5 06x06	HY-748	2
13	Flange Hex Bolt 3/8 - 16 - 1.25	92979A348	24
14	Tractor Blade 6 Foot	TB72	
15	Tractor Blade 8 Foot	TB96	
16	Tractor Blade 9 Foot	TB108	
17	Tractor Blade 10 Foot	TB120	
19	Line, Blade to Hydro Clamp	1-871	4
20	JIC 90 Elbow 04X04	6500-04-04	4
21	Distribution Block	C11275	1
22	Bulkhead Nut GR5 7 16-20	94846A520	4

Item	Part Name	Part Number	QTY
23	CYLINDER BRACKET	40	2
24	Flange Locknut, 3 8 -16	93298A130	16
25	JIC - Oring 06x06	6400-0-06-06	5
26	Hex Bolt GR8 3/4-10 x 3.25"	91257A848	2
27	JIC 90 Elbow 06 x Union 06	2701-LN-06-06	2
28	Line Cap	11-201	2
29	Hydro Lock Cylinder	BM-0413	2
30	GR5 Hex Nut Thin Nylock 3/4-10	91342A230	4
31	Clamp Group	387	2
32	Line Valve to Dist. Block	1-765	2
33	Line, Dist Block to Bulkhead LG	1-670	4
34	TRACTOR BRACKET	094-2	2
35	Male Ag Coupler	19-400	2
36	Tractor Tube, Driver	567-DRIVER	1
37	Tractor Tube, Passenger	567-PASSENGER	1
38	Hex Bolt GR5 3/8-16 x 3	91257A636	4
39	Flat Washer 3/8	ROC-8071-031	4
40	Carriage Bolt GR5 3/8-16 x 1.25	ROC-2131-626	6

Attaching SnowFire to UnderHitch

Copyright Kage Innovation All Rights Reserved www.kageinnovation.com (844) 314-KAGE

Operator Instructions

To release the SnowKage raise boom approximately 5', tilt plow down until Kage box unit swings freely (must tilt approximately 50 – 60 degrees). Gently set Kage box down using the *vertical* motion of the boom, (rather than the curling motion of the attachment plate).

To attach the SnowKage, raise boom approximately 5', tilt plow down until the Snow Kage plow hooks become visible. Align, and position plow brackets underneath mating hooks of the SnowKage. Using *vertical* motion of boom, pick up the SnowKage, *then* curl the plow back into normal position.

Rubber/Poly Wear Edges only need to be replaced or adjusted when cutting edge of plow is replaced/adjusted. Replacement wearable parts can be purchased by calling Kage Innovation at 844 314 5243.

Down Pressure on plow is still possible. However, operator must not lift front wheels of machine off the pavement excessively (when the SnowKage is attached to the plow), as this could result in unwanted leakage of snow from edges of plow

Rough terrain should be avoided at high speeds (when the SnowKage is attached to the plow), as this can cause excessive bounce, simulating 'release tilt' necessary to release the SnowKage.

SnowKage Cam-Lock Bracket Installation Instructions For BOSS® and Falls® Plows

1. Attach snow plow to skid steer. Position the moldboard straight.
2. Position Cam-Lock brackets on the back radius of the moldboard, pushed up against the top front most support channel of the plow (Fig. A). The center of the Cam-Lock bracket should be 16.5" away from the centerline of the plow moldboard (Fig B). Hold them in place using a C clamp, vise grip, or the likes.
3. Mark the center of the holes in the Cam-Lock bracket on the moldboard of the plow using a 3/8" drill bit or center punch.
4. Drill pilot holes in the moldboard using a 3/16" drill bit. Finish holes with a 3/8" drill bit. Paint or silicone holes in moldboard to prevent rust.
5. Bolt Cam-Lock brackets firmly into place using the gr 5 1½" x 3/8 bolts, with the bolt head and large washer on the front side of the moldboard.

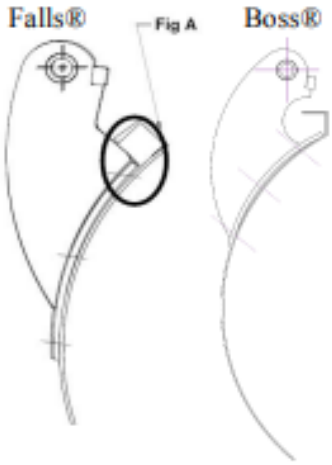

Fig B

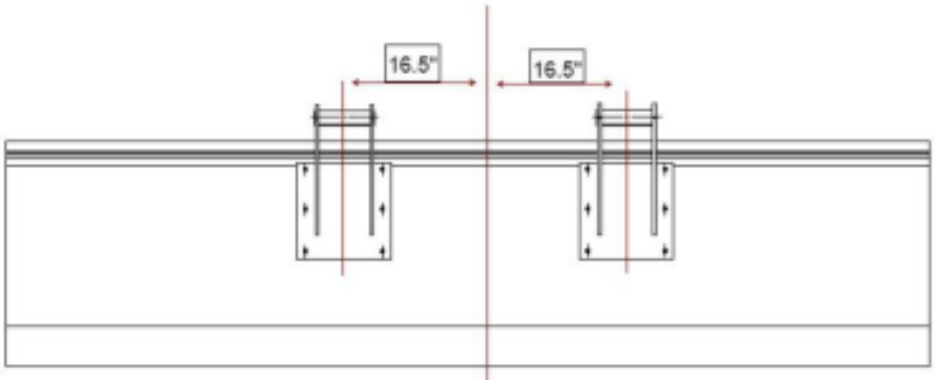

INTRODUCTION

Congratulations on your new SnowFire Blast™ Pusher! Be sure to save this for future parts lookup, and note the other maintenance instructions contained in this owners' manual!

The entire Team at KAGE Innovation is thankful to you for your purchase, and support of our brand! Make sure to let us know how we are doing, and if there is anything that we can do better! We love to serve the snow removal and landscape professionals!

MAINTENANCE

1. There are two grease points located on the slot plate. Grease these 2 x per season. See diagram A.
2. Check and replace your cutting edges on the moldboard as needed. Depending on the plowing surface, speed, and use, this will happen 1—4 times per season. The OEM cutting edges are 6" Tall x 5/8" thick high carbon steel. They use a "standard highway punch" bolt pattern.
3. Check and replace your skids P/N 6912587. Typically these will be replaced as often as the cutting edge(s). See diagram B for easy replacement.

A

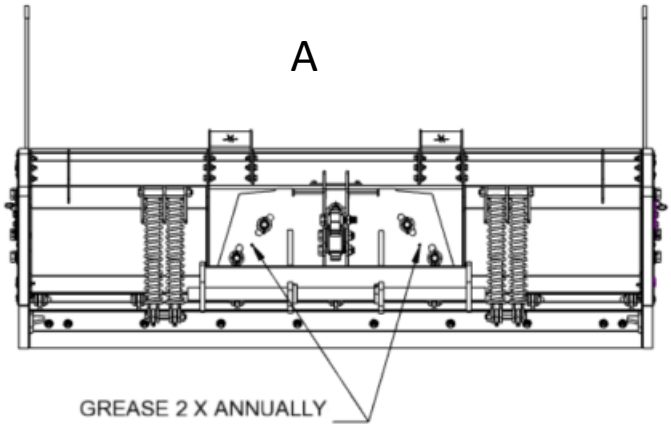

B

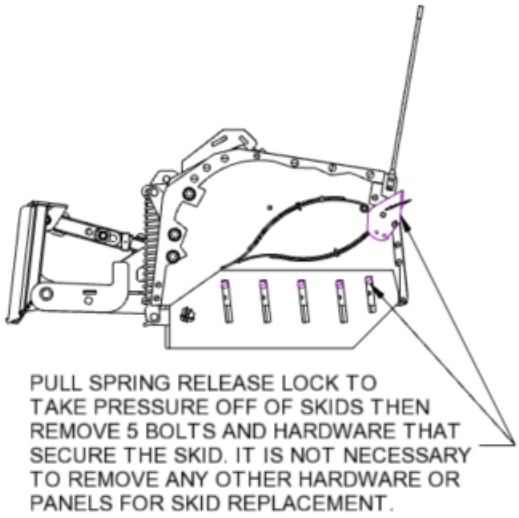

INITIAL SETUP STIFFENER ARM CONFIGURATIONS

6' Arm Stiffener Use—Single

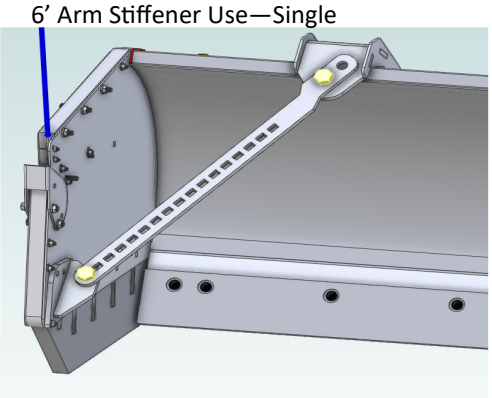

8-12' Example Arm Stiffener Use—Double

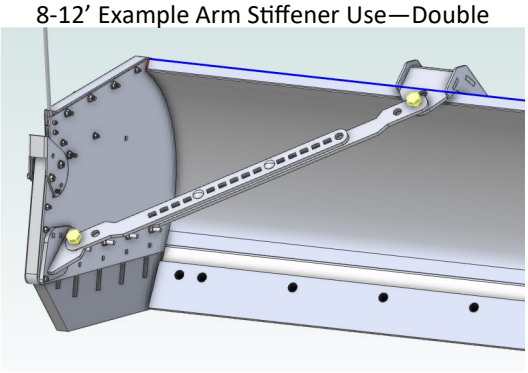

Parts Breakdown for 6, 8, 9, and 10' Models

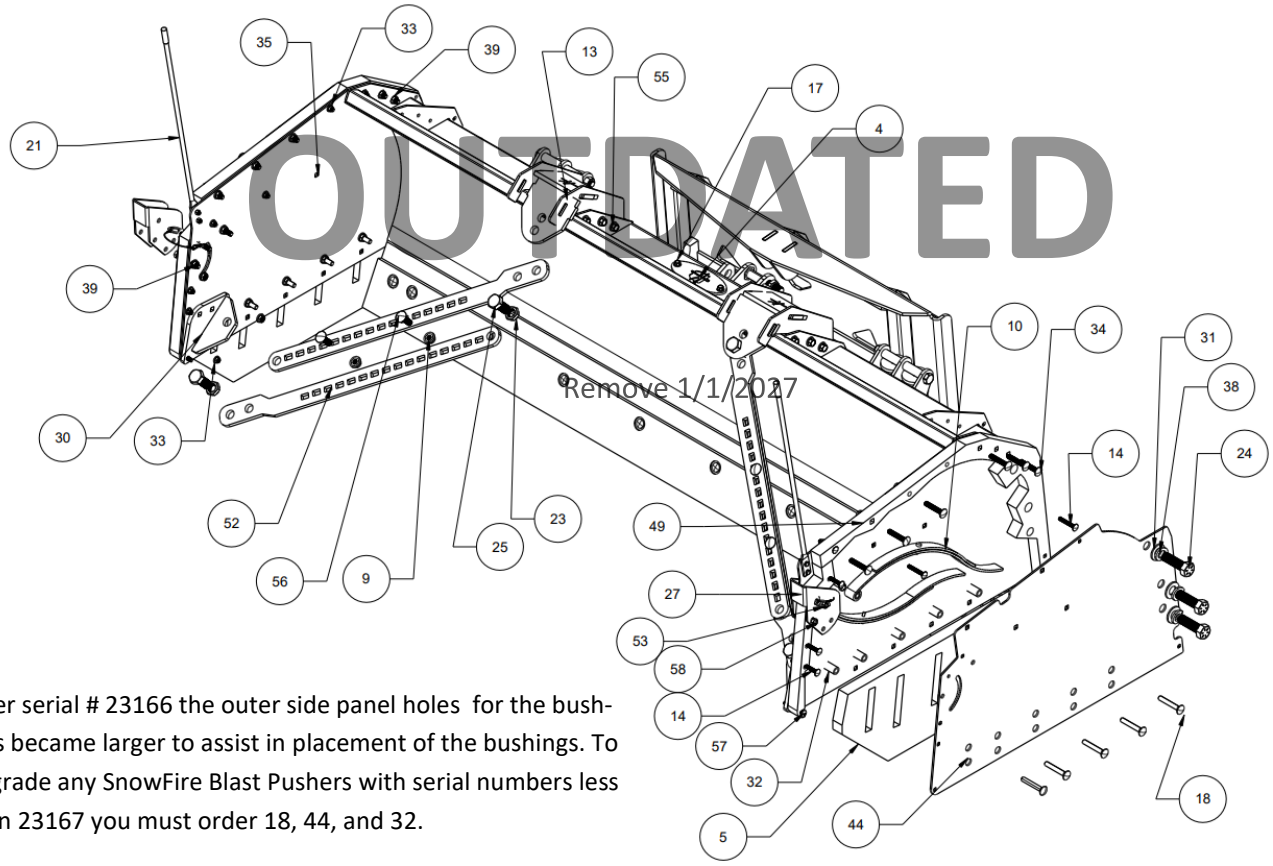

After serial # 23166 the outer side panel holes for the bushings became larger to assist in placement of the bushings. To upgrade any SnowFire Blast Pushers with serial numbers less than 23167 you must order 18, 44, and 32.

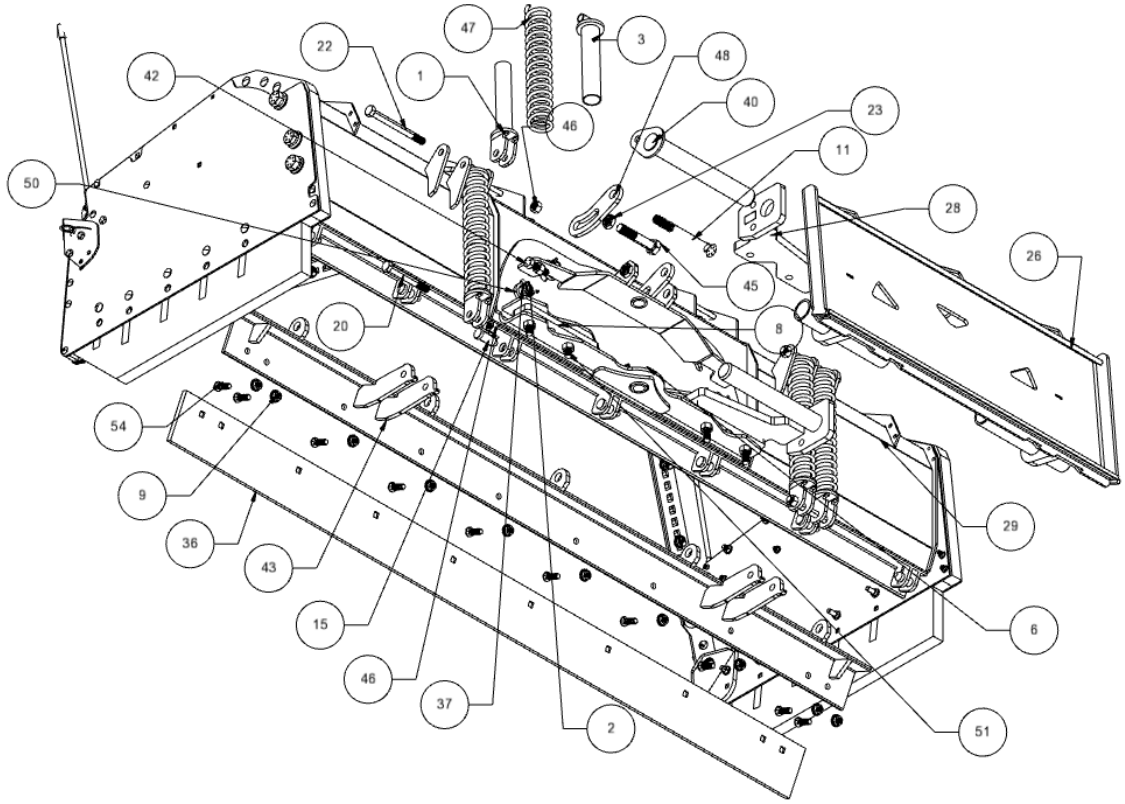

Parts Breakdown for 6, 8, 9, and 10' Models

Item	Part Name	Part Number	Quantity
1	Spring Bottom L	SP800	4
2	Cotter Pin 3/ 16 x 2	98338A516	13
3	Spring Top L	SP900	4
4	Hole Cap	404-1	1
5	Pusher Skid	6912587	2
6	SLOT PLATE	153	1
7	Leaf Spring Lock	6914889	2
8	Pusher Spacer Block	6918744	2
9	Flange Locknut 5/ 8-11	3221357	14
10	Leaf Spring	123456789121	4
11	Hex Bolt GR8 1-8 x 8	91257A977	1
13	Pusher Brace Bracket	6914899	2
14	Carriage Bolt 3_8-16 x 2.5	90185A634	14
15	Clevis Pin	98306A677	7
17	Flange Hex Bolt 3/ 8 - 16 - 1.25	92979A348	2
18	Carriage Bolt GR5 1/ 2-13 x 3	ROC-2131-724	10
20	Hex Bolt GR5 3/ 4-10 x 6	91247A859	2
21	Plow Guide	W-1578	2
22	Hex Bolt GR5 3/ 4-10 x 8	91247A863	2
23	1-8 Thin Hex Nylock Nut Gr5	91342A260	6
24	Hex Bolt Gr8 1-8 x 3.25	92620A959	6
25	HEX BOLT GR8 1-8 x 2.25	92620A954	4
26	Floating Skidsteer Attachment Plate	28-600	1
27	Pusher Frame Front	6902365	2
28	Pusher Pivot Weldment	6914993	2
29	MOLDBOARD WELDMENT 8	SBM-8	1
30	Universal Brace Weldment	691895	2
31	SAE Flat Washer 1 x 2	90126A038	6
32	Skid Bushing	B-812515	10
33	Flange Locknut, 3_8 -16	93298A130	16
34	Carriage bolt 1/ 2 - 13 x 2.5	90185A722	12
35	Snow Pusher Side Panel Inner	6919888	2
36	Cutting edge 6ft, 8ft, or 9ft	SBC72, SBC96, SBC108	1

Item	Part Name	Part Number	Quantity
136	Cutting edge 10ft	SBC60	2
37	Slotted Nut 1-8	97190A040-K8	6
38	Lockwasher 1"	91102A038	6
39	Flange Locknut 1/ 2 - 13	RF1213OFZ	41
40	Float Pin	67-001	2
42	Hex Bolt Gr5 3/ 4-10 x 2.5	92865A845	2
43	Base Angle SF 6, 8, 9, 10	214-6, 214-8, 214-9, 214-10	1
44	Snow Pusher Side Frame Panel Outer	6913332	2
45	Hex Bolt GR8 1-8 x 6.5	91257A970	1
46	CenterLocknut GR2 3/ 4-10	90040A147-K5	10
47	Spring 17	SP21	4
48	Slide Arc	3908555	2
49	Pusher Frame back	9612875	2
50	1-.375 washer	13W	6
51	Hex Bolt GR8 3/ 4-10 x 4"	91257A851	4
52	Stiff Arm Plate	6912563	4
53	98412A505_Loop-Grip Clevis Pin with Hairpin Cotter Pin	98412A505	2
54	Plow Bolt 5/ 8-11 x 2"	90934A802	10
55	Flange Hex Bolt Grade 5 1/ 2 - 13 x 1.25	92979A467	12
56	Carriage Bolt 5/ 8-11 x 2	90185A810	4
57	Carriage Bolt 3_8-16 x 3	90185A127	2
58	Hex Bolt 1_2-13 x 3.25	91247A725	6

Obsolete Remove 1/1/2027

Parts Breakdown for 12' Models

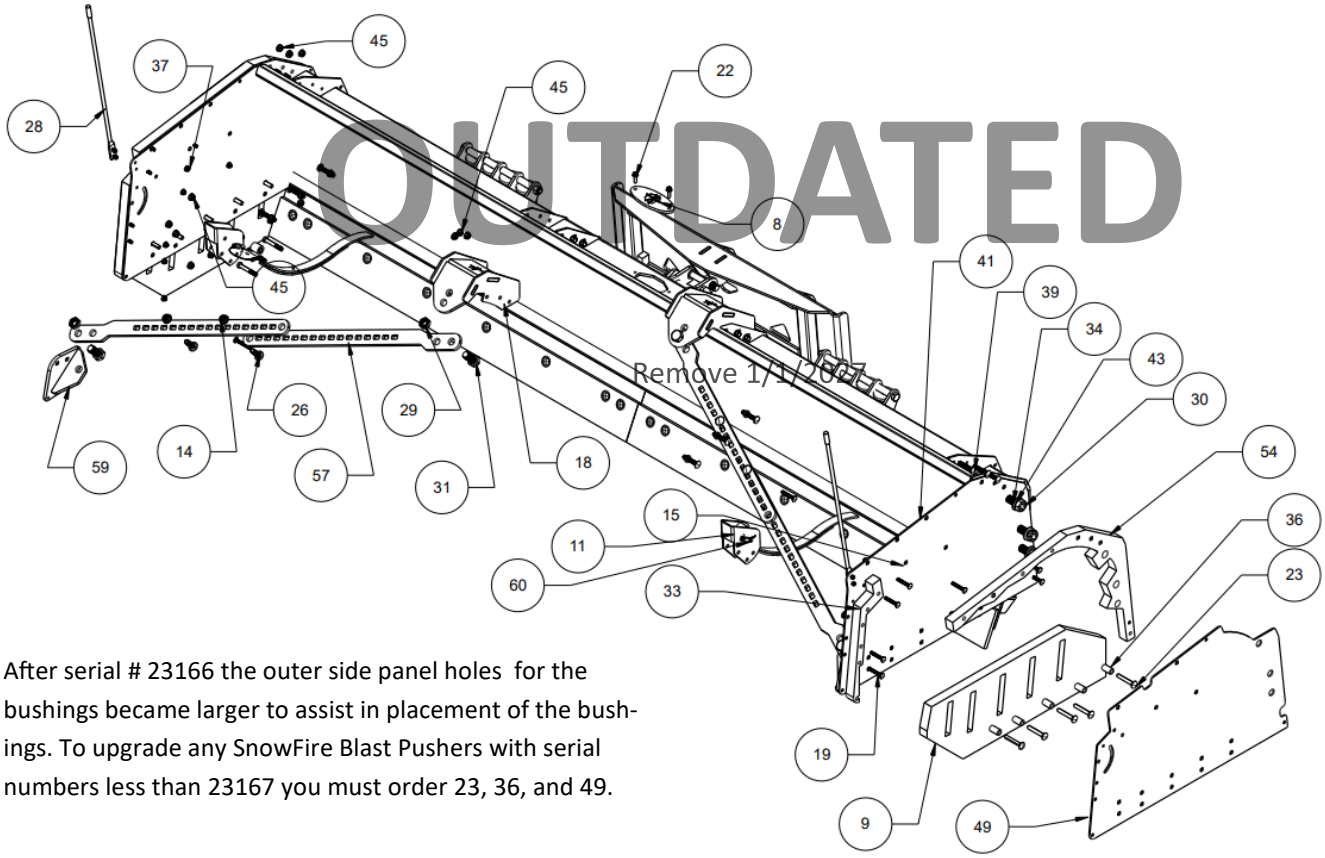

After serial # 23166 the outer side panel holes for the bushings became larger to assist in placement of the bushings. To upgrade any SnowFire Blast Pushers with serial numbers less than 23167 you must order 23, 36, and 49.

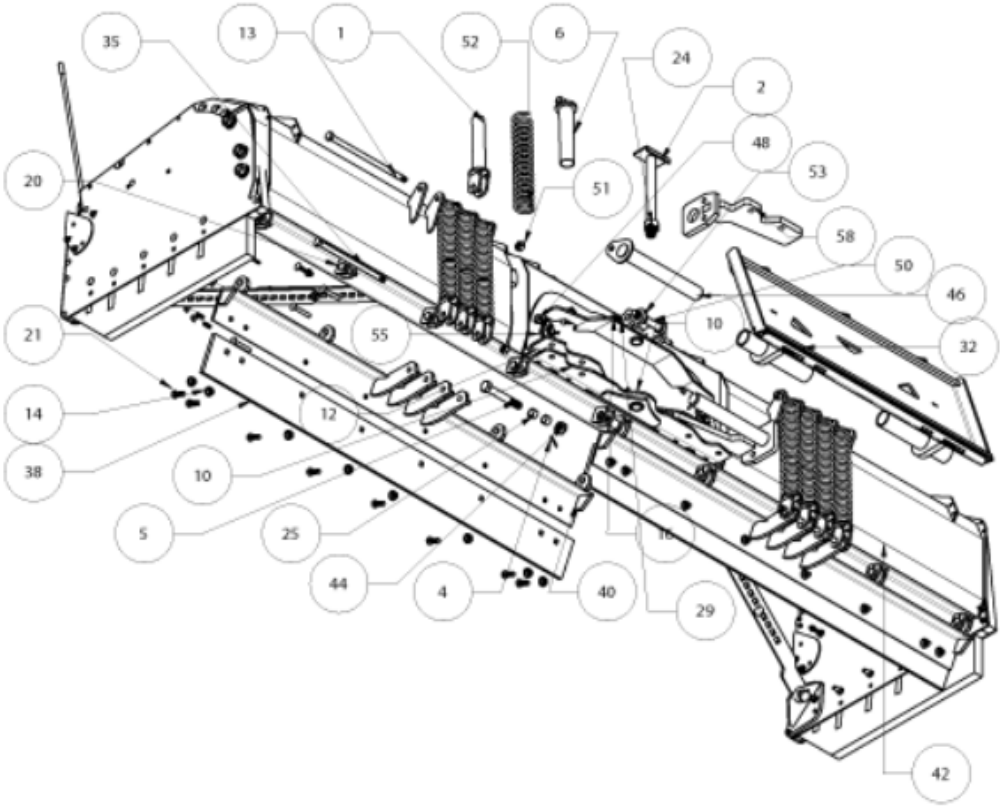

Parts Breakdown for 12' Models

Item	Part Name	Part Number	QTY
1	Spring Bottom L	SP800	8
2	KING PIN	189-1	1
4	Cotter Pin 3/16 x 2	98338A516	15
5	Hex Bolt GR8 1-8 x 6.5 w Hole	91257A970-K5	1
6	Spring Top L	SP900	8
8	Hole Cap	404-1	1
9	Pusher Skid	6912587	2
10	SLOT PLATE	153	1
11	Leaf Spring Lock	6914889	2
12	Pusher Spacer Block	6918744	3
13	Hex Bolt Grade2 .75-10 x 15	H2Z_075_1500_1	2
14	Flange Locknut 5/8-11	3221357	20
15	Leaf Spring	123456789121	3
16	Hex Bolt GR8 1-8 x 8	91257A977	1
17	Flange Hex Bolt 1/2 - 13 x 1	92979A463	12
18	Pusher Brace Bracket	6914899	2
19	Carriage Bolt 3_8-16 x 2.5	90185A634	16
20	Clevis Pin	98306A677	8
21	Plow Bolt 5/8-11 x 2"	90934A802	16
22	Flange Hex Bolt 3/8 - 16 - 1.25	92979A348	2
23	Carriage Bolt GR5 1/2-13 x 3 (superceded)	ROC-2131-724	10
23 V 2	Flange Hex Bolt GR5 1/2 - 13 x 3	90409A155	10
24	Hex Locknut 1.25-7	93470A540	1
25	Stop Bushing	909-4	2
26	Carriage Bolt 5/8-11 x 2	90185A810	4
28	Plow Guide	W-1578	2
29	1-8 Thin Hex Nylock Nut Gr5	91342A260	6
30	Hex Bolt Gr8 1-8 x 3.25	92620A959	6

Item	Part Name	Part Number	QTY
31	HEX BOLT GR8 1-8 x 2.25	92620A954	4
32	Floating Skidsteer Attachment Plate	28-600	1
33	Pusher Frame Front	6902365	2
34	SAE Flat Washer 1 x 2	90126A038	6
35	Hex Bolt Grade2 .75-10 x 13	H2Z_075_1300_1	2
36	Skid Bushing (superceded)	B-812515	10
36 REV 2	Skid Bushing	B-812515 REV2	10
37	Flange Locknut, 3_8 -16	93298A130	15
38	Cutting Edge 6ft	SBC72	2
39	Carriage bolt 1/2 - 13 x 2.5	90185A722	12
40	12 SF Base Angle 6	214-12	2
41	Snow Pusher Side Panel Inner	6919888	2
42	MOLDBOARD WELDMENT 12	SBM-12	1
43	Lockwasher 1"	91102A038	6
44	Slotted Nut 1-8	97190A040-K8	7
45	Flange Locknut 1/2 - 13	RF1213OFZ	40
46	Float Pin	67-001	2
47	Hex Flange Bolt 1_2-13 x 3 IN	90409A155	9
48	Hex Bolt Gr5 3/4-10 x 2.5	92865A845	2
49	Snow Pusher Side Frame Panel Outer (superceded)	6913332	2
49 REV 2	Snow Pusher Side Frame Panel	6913332 REV2	2
50	Hex Bolt GR8 1-8 x 5	91257A965	1
51	CenterLocknut GR2 3/4-10	90040A147-K5	6
52	Spring 17	SP21	8
53	Slide Arc	3908555	2
54	Pusher Frame back	9612875	2
55	1-.375 washer	13W	6
57	Stiff Arm Plate	6912563	4
58	Pusher Pivot Weldment	6914993	2
59	Universal Brace Weldment	691895	2
60	98412A505_Loop-Grip Clevis Pin	98412A505	2

OUTDATED
Remove 1/1/2027

Parts Breakdown for 6, 8, 9, and 10' Models

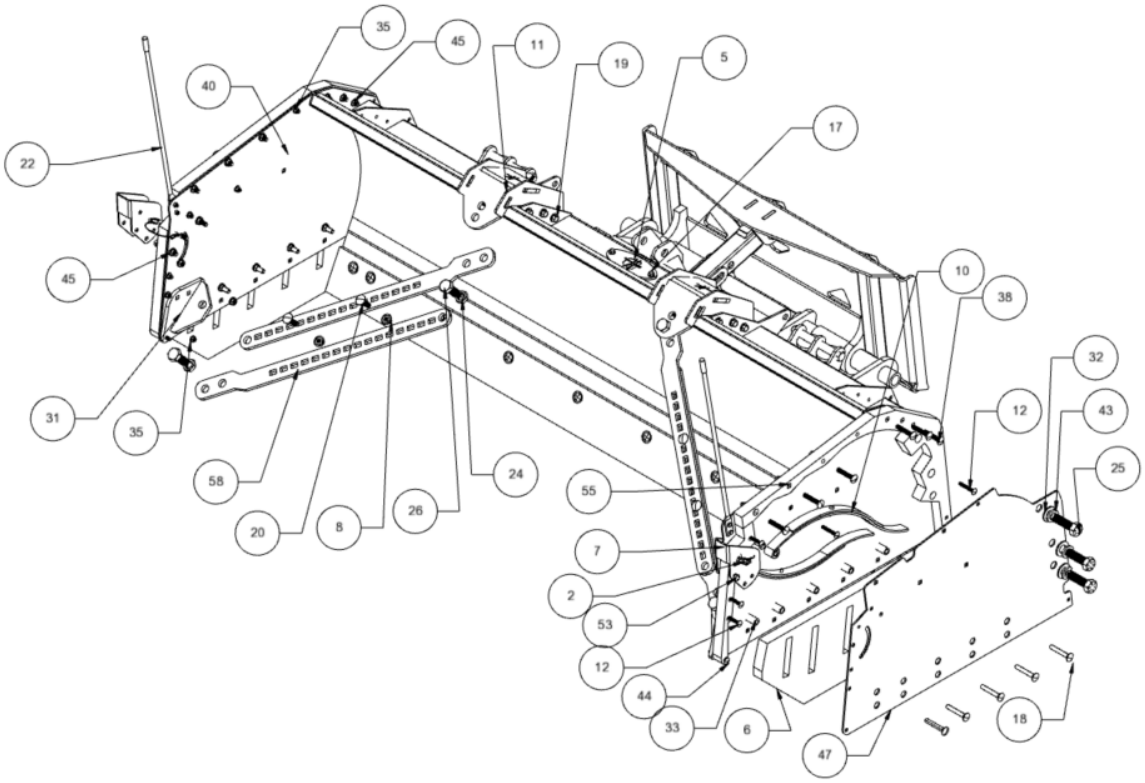

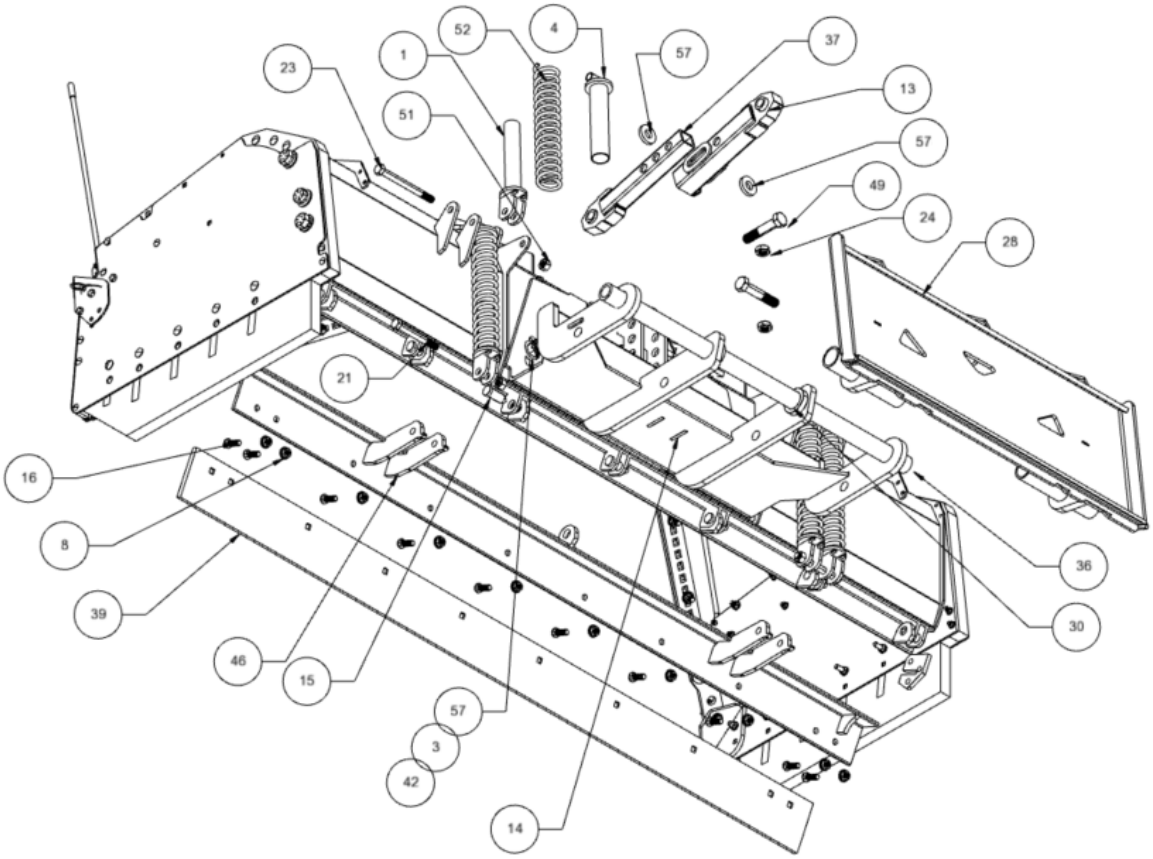

Parts Breakdown for 6, 8, 9, and 10' Models

Item	Part Name	Part Number	Quantity
1	Spring Bottom L	SP800	4
2	98412A505_Loop-Grip Clevis Pin with Hairpin Cotter Pin	98412A505	2
3	Cotter Pin 3/16 x 2	98338A516	13
4	Spring Top L	SP900	4
5	Hole Cap	404-1	1
6	Pusher Skid	6912587	2
7	Leaf Spring Lock	6914889	2
8	Flange Locknut 5/8-11	3221357	14
9	SF Pusher Slot Plate Blank	553-9337	1
10	Leaf Spring	123456789121	4
11	Pusher Brace Bracket	6914899	2
12	Carriage Bolt 3_8-16 x 2.5	90185A634	23
13	Slotted Female Weldment	126-1	1
14	SF Pusher Float Ear	553-9490	2
15	Clevis Pin	98306A677	7
16	Plow Bolt 5/8-11 x 2"	90934A802	10
17	Flange Hex Bolt 3/8 - 16 - 1.25	92979A348	2
18	Carriage Bolt GR5 1/2-13 x 3	ROC-2131-724	10
19	Flange Hex Bolt Grade 5 1/2 - 13 x 1.25	92979A467	12
20	Carriage Bolt 5/8-11 x 2	90185A810	4
21	Hex Bolt GR5 3/4-10 x 6	91247A859	2
22	Plow Guide	W-1578	2
23	Hex Bolt GR5 3/4-10 x 8	91247A863	2
24	1-8 Thin Hex Nylock Nut Gr5	91342A260	7
25	Hex Bolt Gr8 1-8 x 3.25	92620A959	6
26	HEX BOLT GR8 1-8 x 2.25	92620A954	4
27	Pusher Frame Front	6902365	2
28	Floating Skidsteer Attachment Plate	28-600	1

Item	Part Name	Part Number	Quantity
30	2 IN Clamping Shaft Collar	6435K27	2
31	Universal Brace Weldment	691895	2
32	SAE Flat Washer 1 x 2	90126A038	6
33	Skid Bushing	B-812515	10
35	Flange Locknut, 3_8 -16	93298A130	16
36	Float DOM Pin	663-5624	1
37	Male Tube Short Weldment	128-10	1
38	Carriage bolt 1/2 - 13 x 2.5	90185A722	12
39	Cutting edge 8ft	SBC96	1
40	Snow Pusher Side Panel Inner	6919888	2
41	SF Bottom float tube	553-6922	1
42	Slotted Nut 1-8	97190A040-K8	6
43	Lockwasher 1"	91102A038	6
44	90185A127_Carriage Bolt 3_8-16 x 3	90185A127	2
45	Flange Locknut 1/2 - 13	RF1213OFZ	16
46	Base Angle SF 8	214-8	1
47	Snow Pusher Side Frame Panel Outer	6913332	2
49	Hex Bolt GR8 1-8 x 5	91257A965	3
50	SF Pusher Slot Plate Rib	553-6883	2
51	CenterLocknut GR2 3/4-10	90040A147-K5	4
52	Spring 17	SP21	4
53	91247A725_Hex Bolt 1_2-13 x 3.25	91247A725	6
54	Pusher Float Ear	663-9399	2
55	Pusher Frame back	9612875	2
56	Grease Zerk 1/4 - 28	1095K44	2
57	1-.375 washer	13W	8
58	Stiff Arm Plate	6912563	4

Parts Breakdown for 12' Models

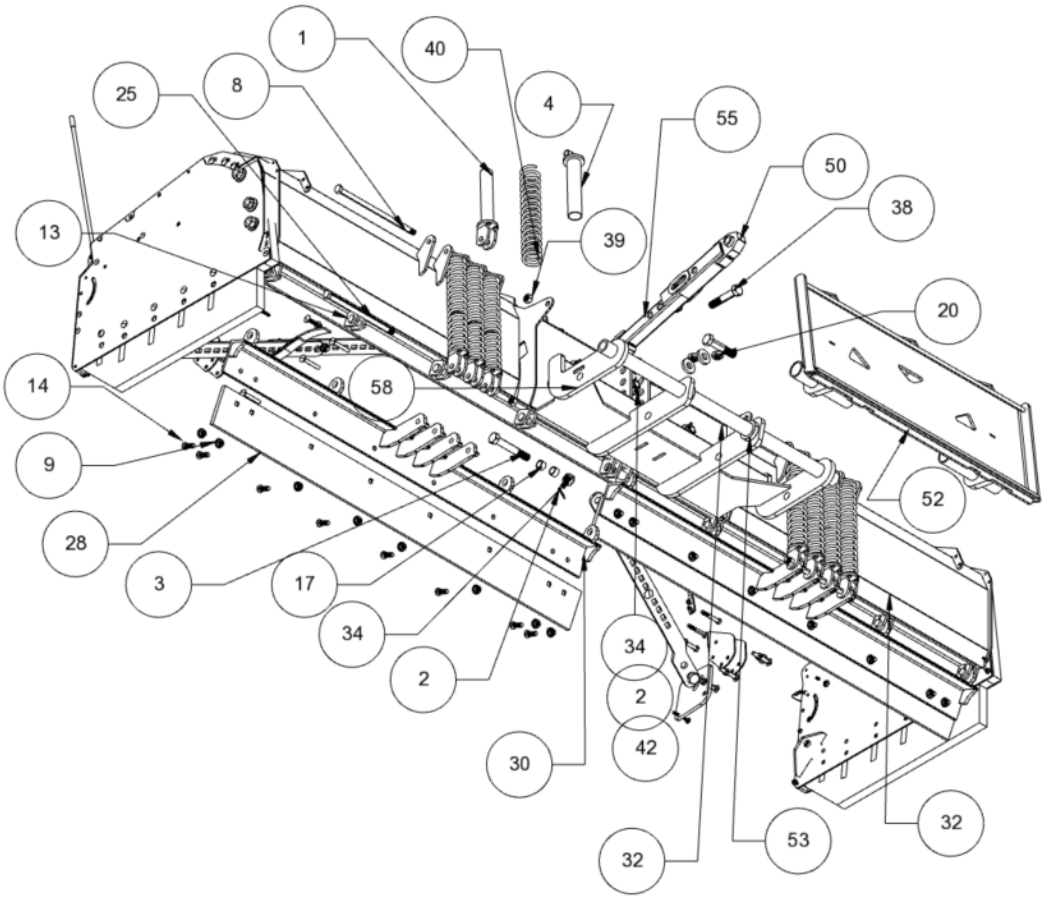

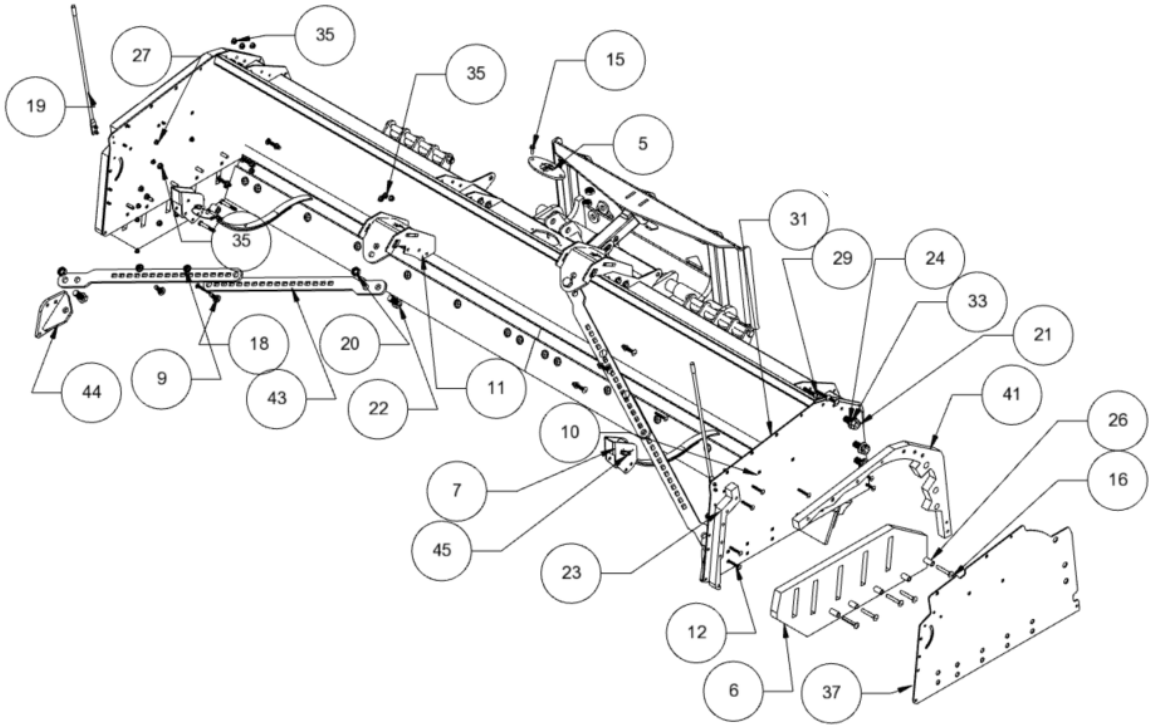

Parts Breakdown for 12' Models

Item	Part Name	Part Number	Quantity
1	Spring Bottom L	SP800	8
2	Cotter Pin 3/16 x 2	98338A516	15
3	Hex Bolt GR8 1-8 x 6.5 w Hole	91257A970-K5	1
4	Spring Top L	SP900	8
5	Hole Cap	404-1	1
6	Pusher Skid	6912587	2
7	Leaf Spring Lock	6914889	2
8	Hex Bolt Grade2 .75-10 x 15	H2Z_075_1500_10	2
9	Flange Locknut 5/8-11	3221357	20
10	Leaf Spring	123456789121	3
11	Pusher Brace Bracket	6914899	2
12	Carriage Bolt 3_8-16 x 2.5	90185A634	15
13	Clevis Pin	98306A677	8
14	Plow Bolt 5/8-11 x 2"	90934A802	16
15	Flange Hex Bolt 3/8 - 16 - 1.25	92979A348	2
16	Carriage Bolt GR5 1/2-13 x 3	ROC-2131-724	15
17	Stop Bushing	909-4	2
18	Carriage Bolt 5/8-11 x 2	90185A810	4
19	Plow Guide	W-1578	2
20	1-8 Thin Hex Nylock Nut Gr5	91342A260	7
21	Hex Bolt Gr8 1-8 x 3.25	92620A959	6
22	HEX BOLT GR8 1-8 x 2.25	92620A954	4
23	Pusher Frame Front	6902365	2
24	SAE Flat Washer 1 x 2	90126A038	6
25	Hex Bolt Grade2 .75-10 x 13	H2Z_075_1300_10	2
26	Skid Bushing	B-812515	10
27	Flange Locknut, 3_8 -16	93298A130	16
28	Cutting Edge 6ft	SBC72	2
29	Carriage bolt 1/2 - 13 x 2.5	90185A722	12
30	12 SF Base Angle 6	214-12	2
31	Snow Pusher Side Panel Inner	6919888	2
32	MOLDBOARD WELDMENT 12	SBM-12	1
33	Lockwasher 1"	91102A038	6
34	Slotted Nut 1-8	97190A040-K8	7
35	Flange Locknut 1/2 - 13	RF1213OFZ	40

Item	Part Name	Part Number	Quantity
37	Snow Pusher Side Frame Panel Outer	6913332	2
38	Hex Bolt GR8 1-8 x 5	91257A965	3
39	CenterLocknut GR2 3/4-10	90040A147-K5	5
40	Spring 17	SP21	8
41	Pusher Frame back	9612875	2
42	1-.375 washer	13W	8
43	Stiff Arm Plate	6912563	4
44	Universal Brace Weldment	691895	2
45	98412A505_Loop-Grip Clevis Pin with Hairpin Cotter Pin	98412A505	2
46	Flange Hex Bolt Grade 5 1/2 - 13 x 1.25	92979A467	6
47	90185A127_Carriage Bolt 3_8-16 x 3	90185A127	1
48	91247A725_Hex Bolt 1_2-13 x 3.25	91247A725	3
49	SF Pusher Slot Plate Blank	553-9337	1
50	Slotted Female Weldment	126-1	1
51	SF Pusher Float Ear	553-9490	2
52	Floating Skidsteer Attachment Plate	28-600	1
53	2 IN Clamping Shaft Collar	6435K27	2
54	Float DOM Pin	663-5624	1
55	Male Tube Short Weldment	128-10	1
56	SF Bottom float tube	553-6922	1
57	SF Pusher Slot Plate Rib	553-6883	2
58	Pusher Float Ear	663-9399	2
59	Grease Zerk 1/4 - 28	1095K44	2

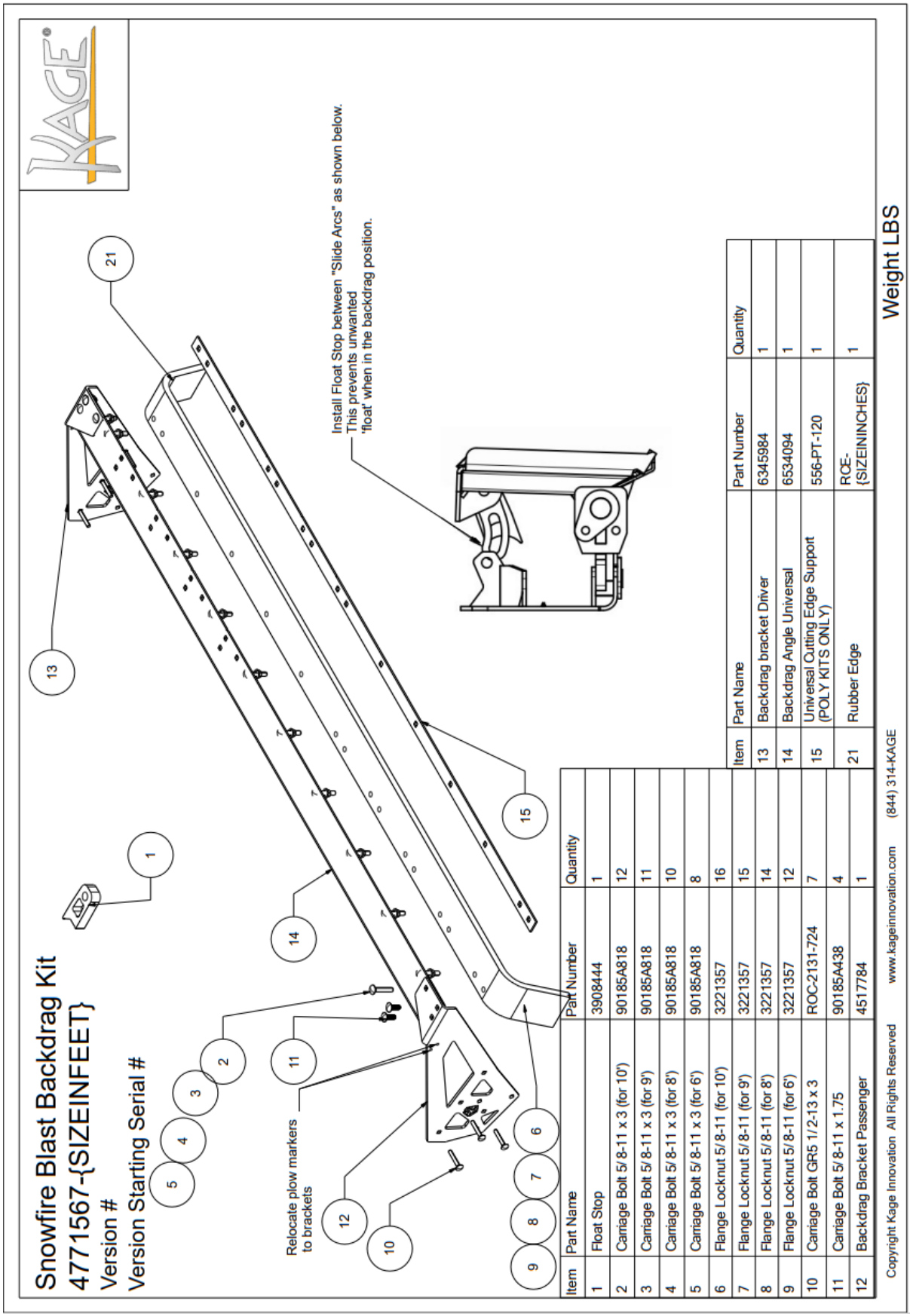

Item	Part Name	Part Number	Quantity
1	Float Stop	3908444	1
2	Carriage Bolt 5/ 8-11 x 3 (for 10')	90185A818	12
3	Carriage Bolt 5/ 8-11 x 3 (for 9')	90185A818	11
4	Carriage Bolt 5/ 8-11 x 3 (for 8')	90185A818	10
5	Carriage Bolt 5/ 8-11 x 3 (for 6')	90185A818	8
6	Flange Locknut 5/ 8-11 (for 10')	3221357	16
7	Flange Locknut 5/ 8-11 (for 9')	3221357	15
8	Flange Locknut 5/ 8-11 (for 8')	3221357	14
9	Flange Locknut 5/ 8-11 (for 6')	3221357	12
10	Carriage Bolt GR5 1/ 2-13 x 3	ROC-2131-724	7
11	Carriage Bolt 5/ 8-11 x 1.75	90185A438	4
12	Backdrag Bracket Passenger	4517784	1

Item	Part Name	Part Number	Quantity
13	Backdrag bracket Driver	6345984	1
14	Backdrag Angle Universal	6534094	1
15	Universal Cutting Edge Support (POLY KITS ONLY)	556-PT-120	1
21	Rubber Edge	RCE-{SIZEININCHES}	1

Backdrag Kit Installation instructions:

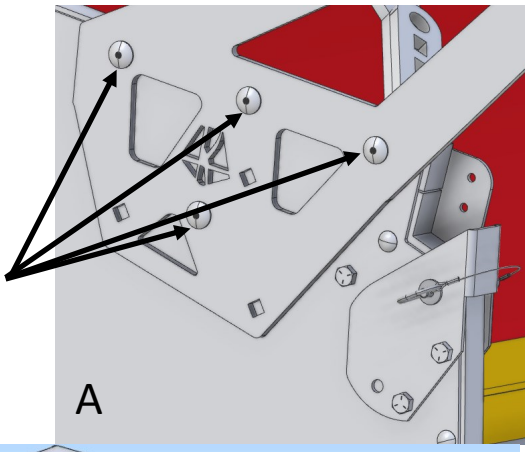

1. If kit is included with the SnowFire Blast:

Loosen the bolts holding the Driver and Passenger Brackets enough that the brackets can move. Swing the brackets up to proper position. If the spring release lock is not already released on each side, release them. Install four(4) 5/8-11x3 carriage bolts on each side in the holes shown by the arrows in A. Loosely install nuts on the carriage bolts.

If kit is purchased separately:

Release both spring release locks. Take out the four(4) 5/8-11x3 carriage bolts on each side in the holes shown by the arrows in A. Install the brackets and reinstall the carriage bolts. Loosely install nuts on the carriage bolts.

If possible, raise the plow up during step 1 to take tension off of the springs

If the machine being used is not able to angle the plow down enough to use the backdrag kit, use the second set of holes to angle the kit down.

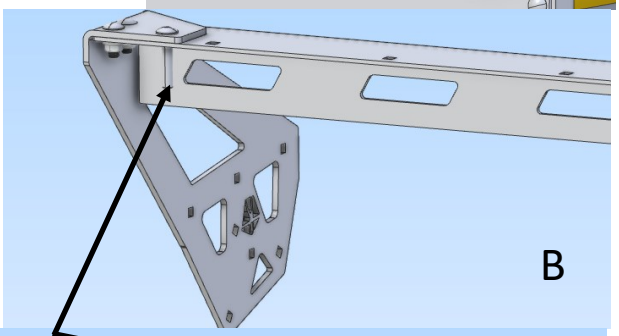

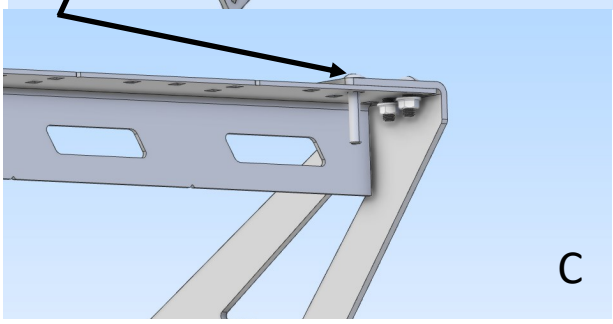

2. Using two(2) 1/2-13x1.75 carriage bolts and two(2) 1/2-13 locknuts for each side, install the Universal Backdrag Angle as shown in B and C. Tighten the nuts down but leave them loose enough that the angle still has some play. Install 1/2-13x3 carriage bolts in the locations shown by the arrows but do not add nuts.

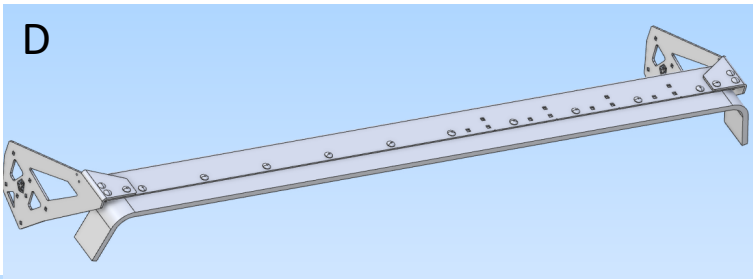

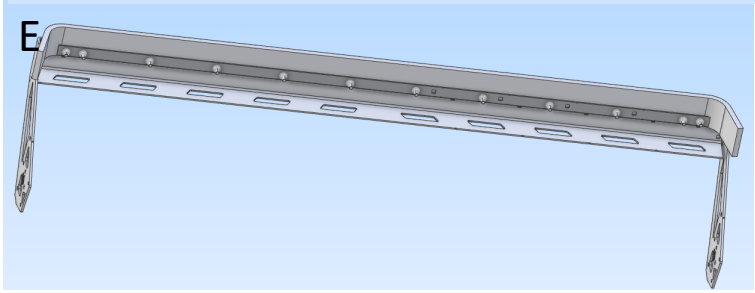

3. Install the cutting edge and Universal Cutting Edge Support with 1/2-13x3 carriage bolts and 1/2-13 locknuts as shown in D and E. Be sure to install locknuts on the 1/2-13x3 nuts from step 2.

This step is easier with a second person or forks to hold up the cutting edge.

4. Tighten all nuts and bolts down. Relocate plow markers to the Backdrag Brackets

Revision Comments

Date	Name	Description
6/7/2024	Josh	First Revision
6/17/2024	Josh	Added Xtreme breakdown
8/19/2024	Josh	Added SFM54 breakdown
10/12/2024	Josh	Added backdrag install instructions
12/23/2024	Josh	Added Snowkage 12’ box breakdown
1/17/2025	Josh	Added XPK breakdowns
2/3/2025	Josh	Updated backdrag kit to new version
4/11/2025	Josh	Updated backdrag edge to rubber, page 53, 54
5/6/2025	Josh	Added QR codes for videos, updated quick attach sheet, page 3-4, 13-18, 20, 30,32, 43-45
7/14/2025	Josh	Updated SF blast breakdowns to new slot plate, outdated old breakdowns, pages 50-58
8/12/2025	Josh	Updated Xtreme breakdowns, Pages 42, 45, 46