Snow Dozer™ Wing

Owners Manual

REV: 2025.9.3

KAGE® Innovation LLC 502 Simmon Drive Osceola, WI 54020 | (844) 314 - Kage | www.kageinnovation.com

Snow Dozer Owners Manual

Revision 2024.7.15

Contents:

Configurations 3
Routing Instructions 4
Specifications 6
Parts Breakdowns 7-27
Schematics 28-31

SnowDozer Configurations

1: Plow Configurations

The SnowDozer Plow is offered in 2 configurations. Each configuration has a different parts list for the plow center section.

- 2-in-1 system with a removable box. The parts breakdown for the 2-in-1 system can be found in the SnowDozer 2-In-1 Owners Manual
- Hydraulic wings. The parts breakdown for the Wing configuration can be found on page 12, the parts breakdown for the Wing hydraulics can be found on pages 27-28.

2-in-1 System

Wing Plow

2: Pivot Frame Configurations

The pivot frame also comes in 2 configurations: 3-Point for tractors and Quick Attach for loaders.

See page 16-28 for 3-Point specific parts breakdowns.

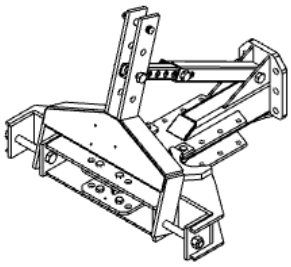

3-Point

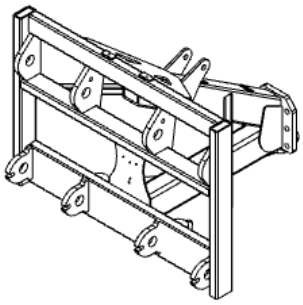

Loader Quick Attach

2: Hinge Block Configurations

The Wing configuration of the SnowDozer has two different versions for the Hinge Block part, one for SnowDozers with standard cutting edges and one for SnowDozers with AdvantEdge.

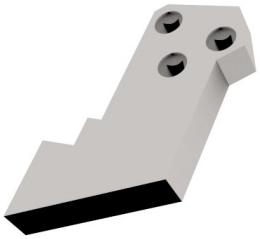

Standard

Part# 200-9710

AdvantEdge

Part# 200-9710

Routing wire harness and installing wing control (Wing Plow)

1

Attach plow to loader including hydraulics. Route machine wire harness up loader boom to 12V (24V optional_ auto plug inside loader cab, fig 1. Ensure there is enough slack and follow pivot points while routing. 24v coils are available from factory.

Fig. 1

2

Mount the pushbuttons using the provided RAM mount, double sided tape, or tape to joystick. See examples of these 3 mount options below. When mounting directly to the factory joystick, you can use a pliers to bend the metal tabs to conform to the shape of the joystick and then tape in a location that the operator can reach each button with their fingers.

Tape nearby auxiliary lever

Tape pushbuttons to joystick –bend tabs to conform

Use provided RAM mount

3

Plug in the adapter plug to 12 (24VDC coils are optional. If unsure check the coil marking on the valve underneath the middle cover of the SD Plow Moldboard).

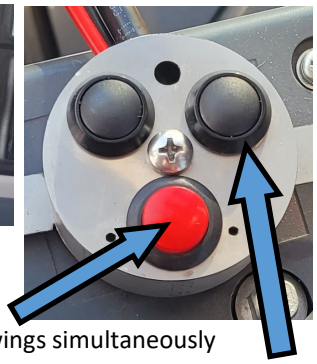

Red operates both wings simultaneously

Black operates both left or right wings independently.

NOTE: to associate each button with left or right wing, swap the plugs at the valve / plow harness.

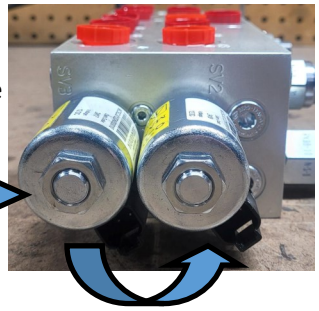

Some plows will have 2 extra plugs on the passenger side of the valve. These plugs are used for a smart controller and can be ignored if the plow does not have one

IMPORTANT CHANGE FALL OF 2024

IN FALL 2024 KAGE RE-DESIGNED THE SNOWDOZER MOLDBOARD TO ACCOMMODATE THE HYDRAULIC WING KIT. THIS CHANGE REQUIRED THAT WE ADD A C-CHANNEL TO THE LENGTH OF THE MOLDBOARD, DECREASE THE CENTER MOLDBOARD TO 6' RATHER THAN 8' AND OUTER SECTIONS. WE ALSO SWITCHED THE OSCILLATION CYLINDERS TO SPRING-RETRACT RATHER THAN 'PUSH'. THESE CHANGES ARE PICTURE BELOW.

OLD PRE-FALL-2024

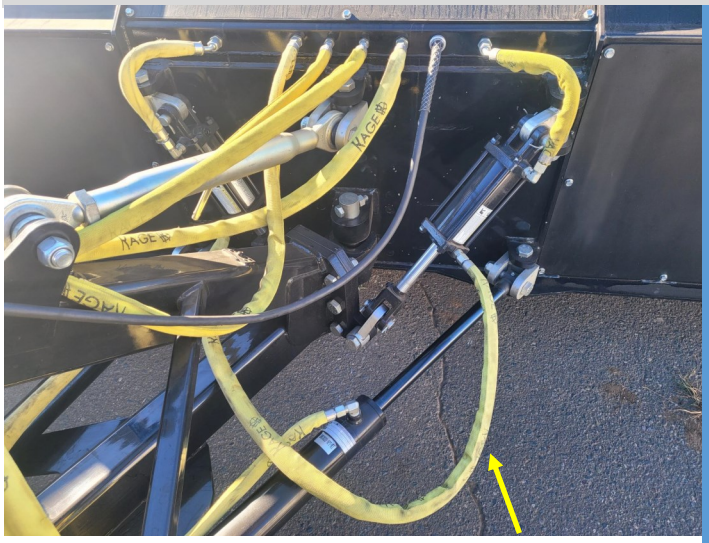

Air transfer line connecting oscillation retracting ports (OLD)

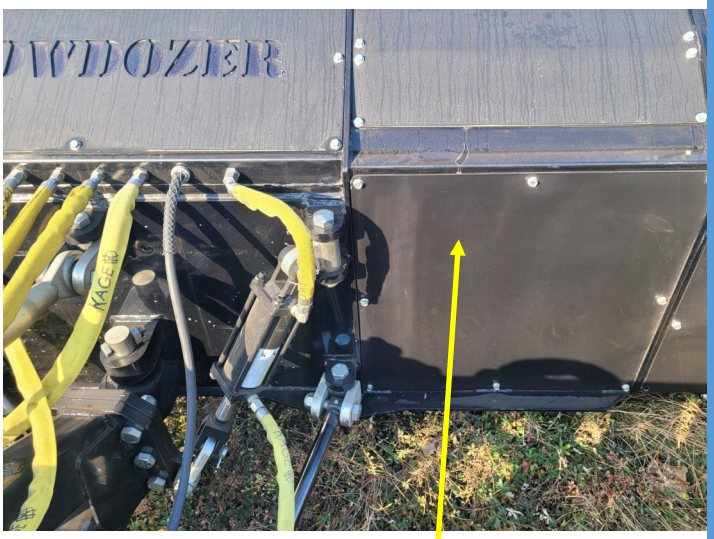

Solid 8' back—no channel for wing cylinders (OLD)

Fig 2

NEW POST FALL-2024

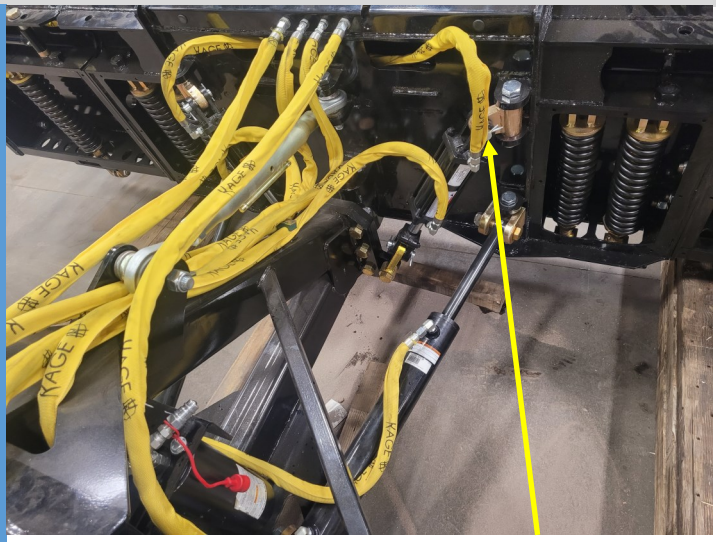

Air transfer line connecting oscillation extending ports (NEW)

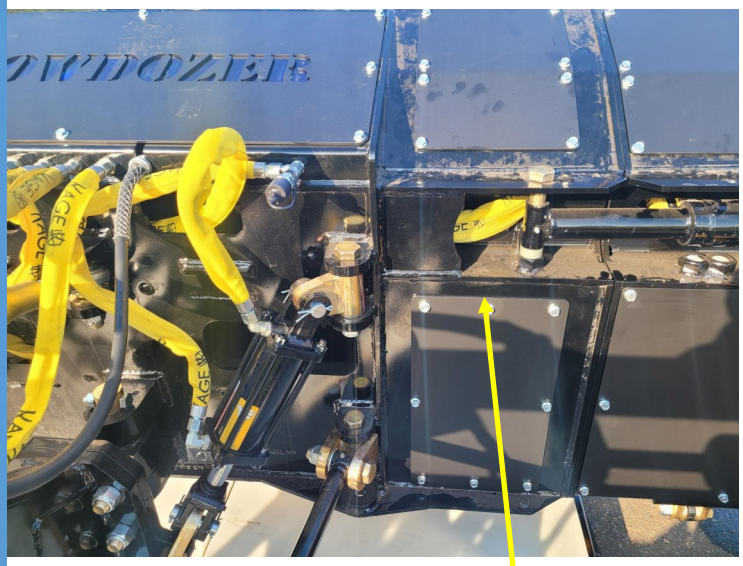

Opening in 6' back for wing cylinders (NEW)

Fig 3

SnowDozer™ Wing Plow Specifications

All Dimensions Provided Are Approximate And For Reference Only

Model	A Inches	B Inches	C Inches	D Inches	E Inches	F Inches	G Inches	H Weight	I Inches
BPS1018	131	216	140	53	202	171	115		46.5
BPS1020	131	240	140	65	194	186	115		46.5
BPS1220	155	240	164	53	218	193	137	4866	46.5
BPS1422	179	264	188	53	242	215	159		46.5
BPS1624	203	286	212	53	266	236	180		46.5
BPS1826	227	310	236	53	290	257	201		46.5
BPS1222	155	264	164	65	226	208	137		46.5
BPS1424	179	286	188	65	250	230	159		46.5
BPS1626	203	310	212	65	274	250	180		46.5
BPS1828	227	334	236	65	298	272	201		46.5

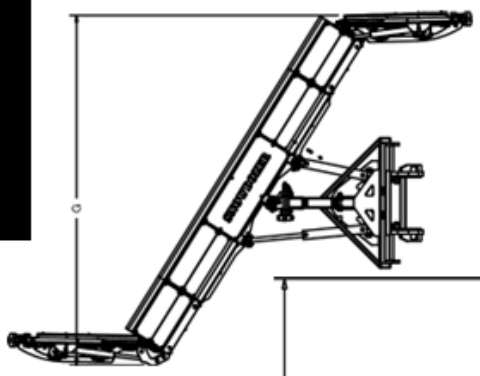

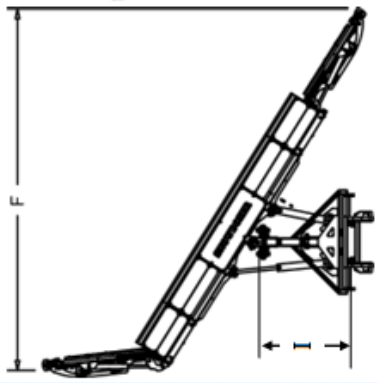

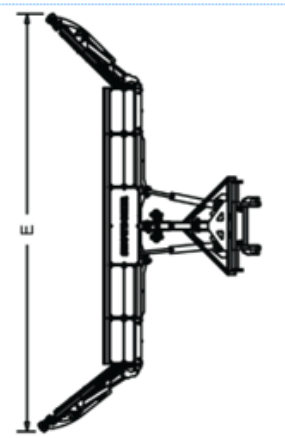

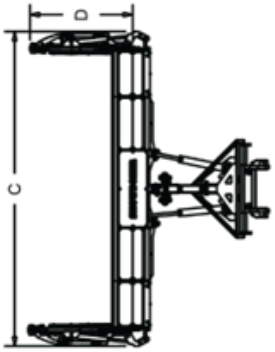

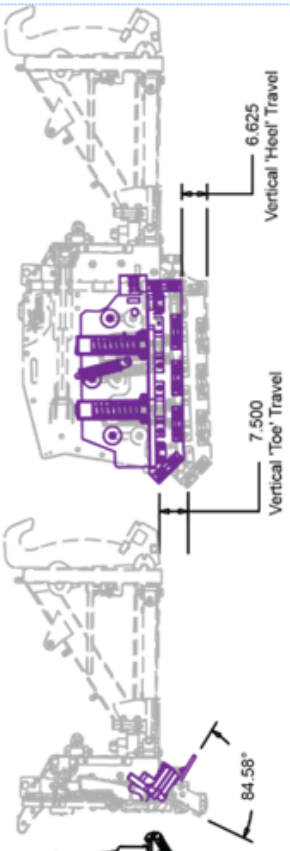

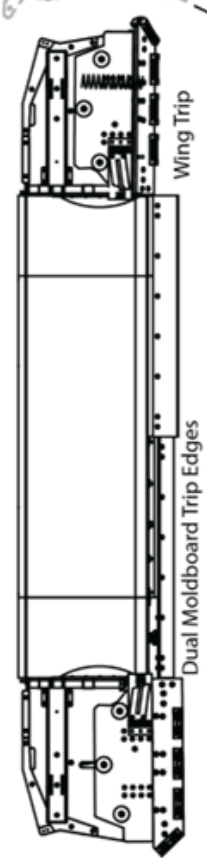

SnowDozer 10 FT Blade w_ Floating Quick Attach
BP10
Version # 1
Version Starting Serial #

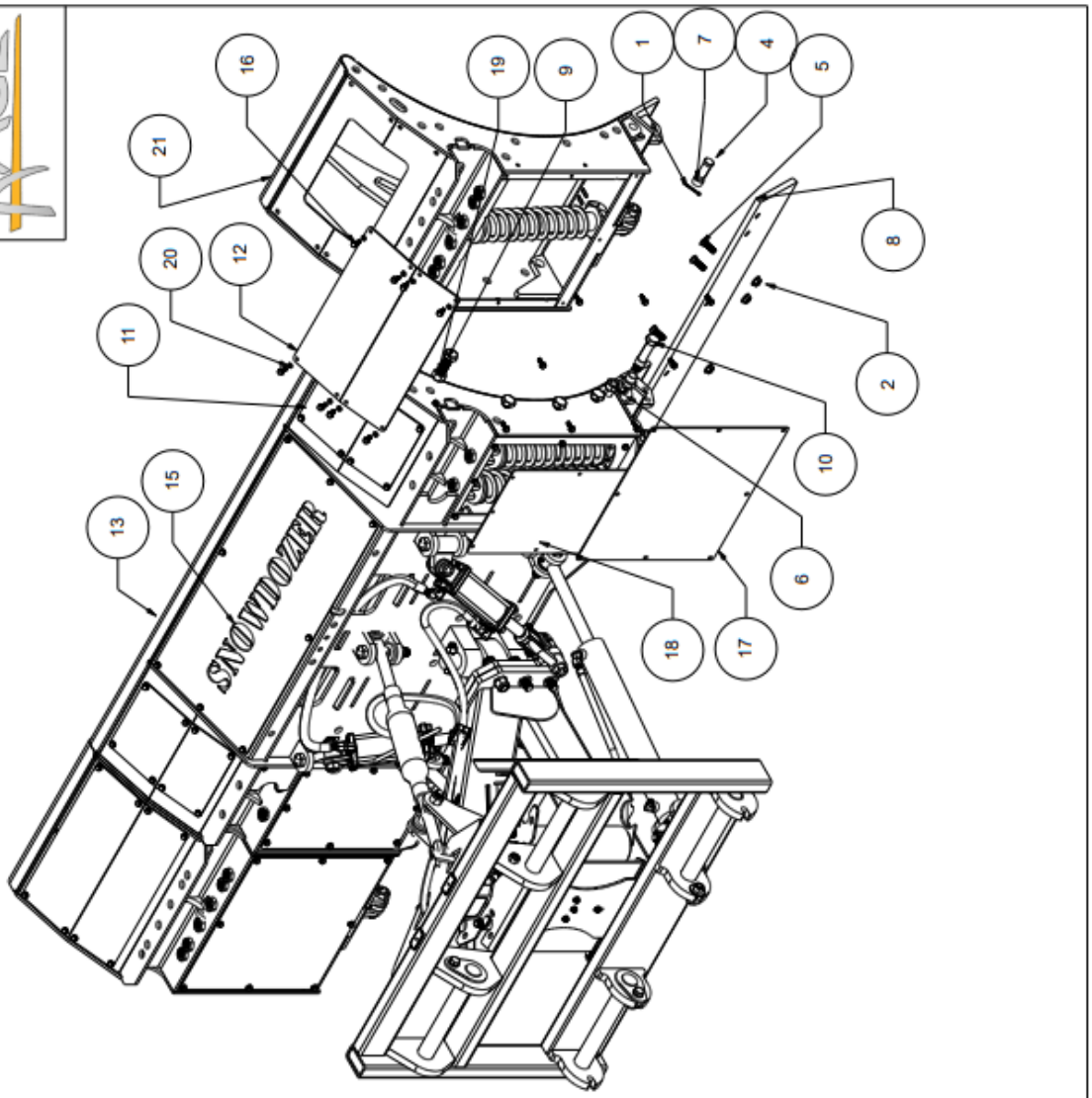

Item	Part Name	Part Number	Quantity
1	Cotter Pin 3/ 16 x 2	98338A516	4
2	Flange Locknut 5/ 8-11	3221357	14
4	Clevis Pin	98306A677	2
5	Plow Bolt 5/ 8-11 x 2.5"	90934A804	14
6	Hex Bolt Gr8 1-8 x 3.5	91257A959	2
7	Stop Bushing	909-4	8
8	Cutting edge 3/ 4 x 8 x 5'	SBCSD60	2
9	HEX BOLT GR8 1-8 x 2.25	92620A954	12
10	Hex Bolt GR8 1-8 x 4.75 w Hole	91257A964-K	2
11	Top Cover 12 Aluminum	TC12	2
12	Top Cover 24 Aluminum	TC24	2
13	SnowDozer 6 FT Center Blade Assembly (Loader Pivot Frame)	SDO6(HEG1)	1
14	Slotted Nut 1-8	97190A040-K8	2
15	Access Panel	AP100	1
16	Flange Hex Bolt 3/ 8-16 x 1 Self Tapping	93882A657	68
17	Back Cover 24 Wing	BC24-W	2
18	Back Cover 6 Foot SD Moldboard	BC12	2
19	Hex Nylock 1-8	95615A320	14
20	Oil Resistant Buna_N O-Ring 3_8	9452K338	68
21	Section Moldboard Assembly 2	SM2	2

Weight LBS 4679

Copyright Kage Innovation All Rights Reserved www.kageinnovation.com (844) 314-KAGE

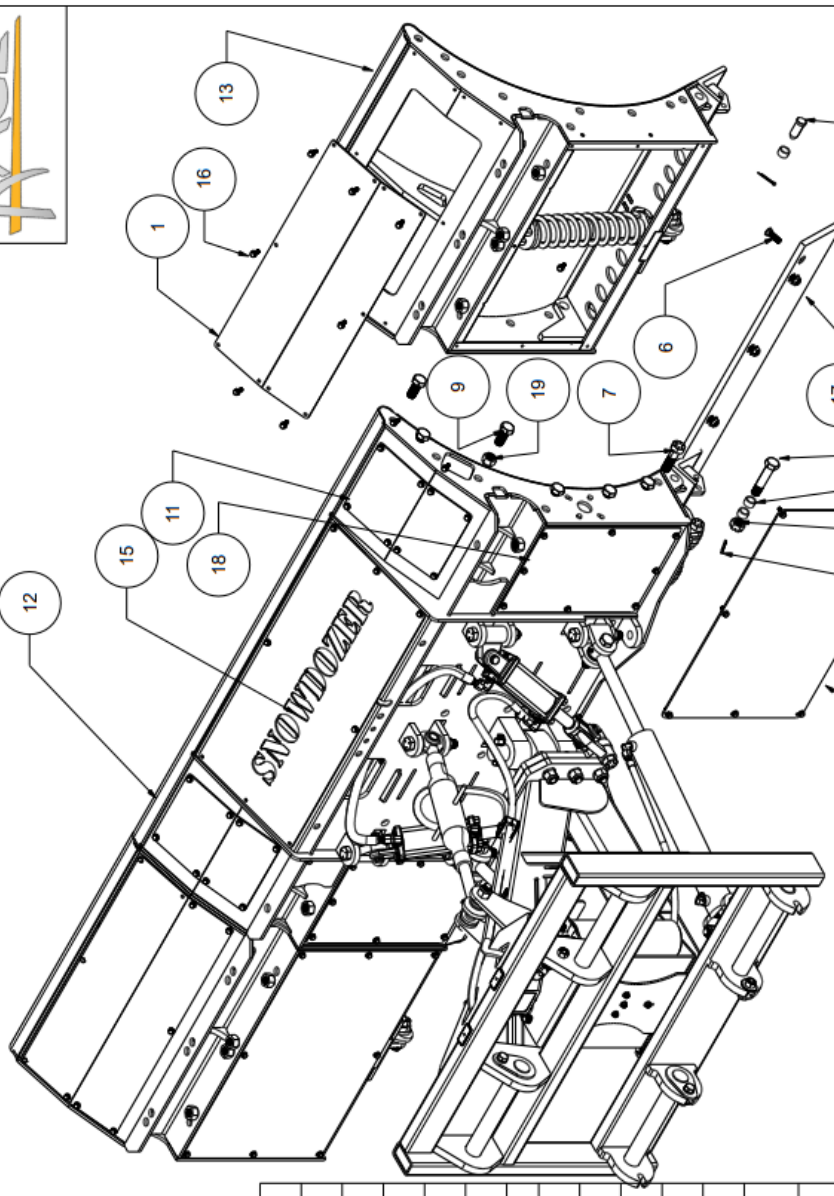

SnowDozer 12 FT Blade w_ Floating Quick Attach
BP12
Version # 1
Version Starting Serial #

Item	Part Name	Part Number	Quantity
1	Top Cover 36 ALuminum	TC36	2
2	Cotter Pin 3/ 16 x 2	98338A516	4
3	Back Cover 36 Wing	BC36-W	2
4	Flange Locknut 5/ 8-11	3221357	16
5	Clevis Pin	98306A677	2
6	Plow Bolt 5/ 8-11 x 2 1/ 2"	90934A804	16
7	Hex Bolt Gr8 1-8 x 3.5	91257A959	2
8	Stop Bushing	909-4	8
9	HEX BOLT GR8 1-8 x 2.25	92620A954	12
10	Hex Bolt GR8 1-8 x 4.75 w Hole	91257A964-K	2
11	Top Cover 12 Aluminum	TC12	2
12	SnowDozer 6 FT Center Blade Assembly (Loader Pivot Frame)	SDC6(HEG1)	1
13	Section Moldboard Wing Assembly 3	SM3-W	2
14	Slotted Nut 1-8	97190A040-K8	2
15	Access Panel	AP100	1
16	Flange Hex Bolt 3/ 8-16 x 1 Self Tapping	93882A657	73
17	Cutting edge 3/ 4" x 8" x 6'	SBCSD72	2
18	Back Cover 6 Foot SD Moldboard	BC12	2
19	Hex Nylock 1-8	95615A320	14

Weight LBS 4679

Copyright Kage Innovation All Rights Reserved www.kageinnovation.com (844) 314-KAGE

SnowDozer 14 FT Blade w_ Floating Quick Attach

BP14

Version # 1

Version Starting Serial #

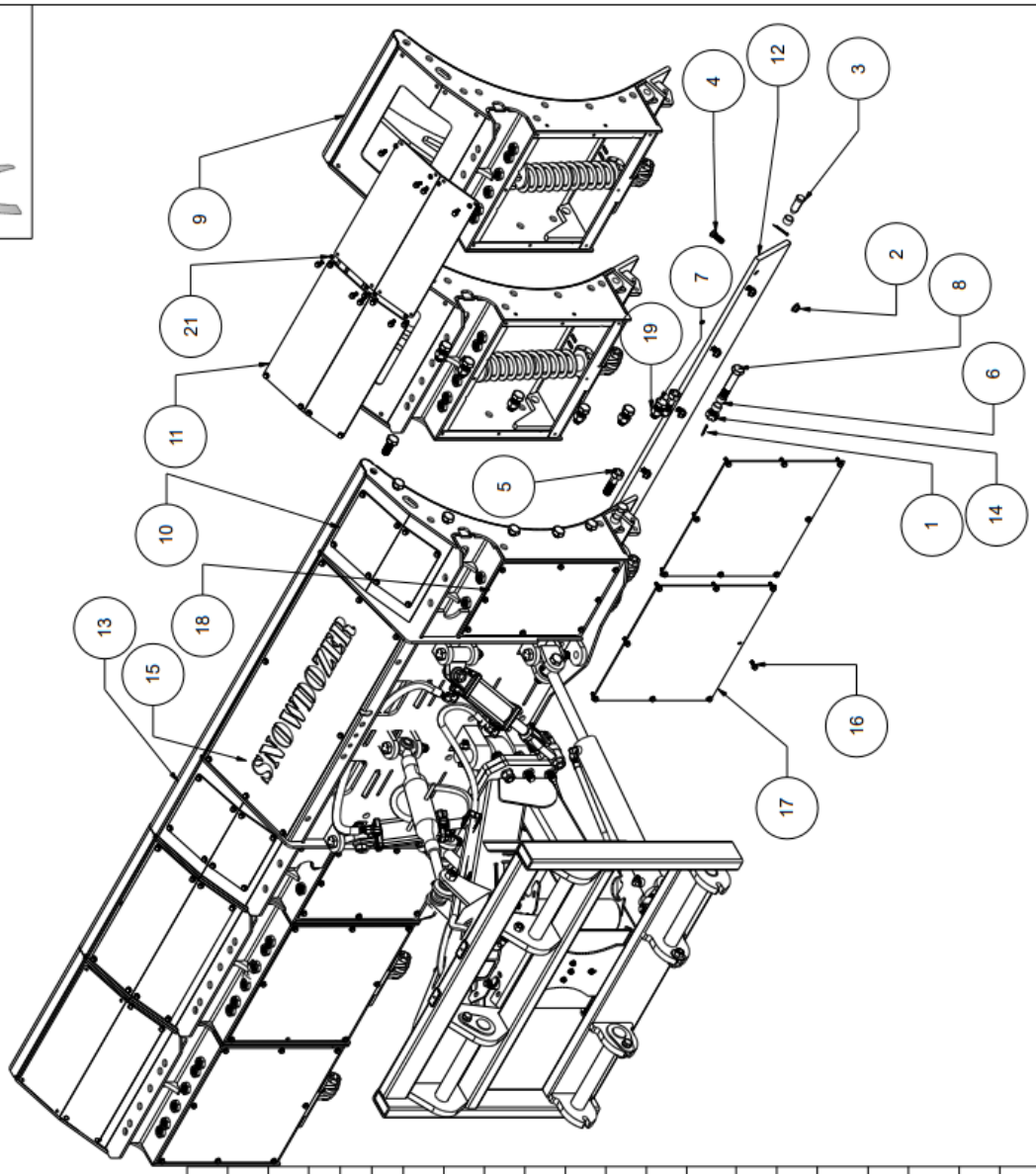

Item	Part Name	Part Number	Quantity
1	Cotter Pin 3/16 x 2	98338A516	6
2	Flange Locknut 5/8-11	3221357	18
3	Clevis Pin	98306A677	2
4	Plow Bolt 5/8-11 x 2 1/2"	90934A804	18
5	Hex Bolt Gr8 1-8 x 3.5	91257A959	4
6	Stop Bushing	909-4	12
7	HEX BOLT GR8 1-8 x 2.25	92620A954	18
8	Hex Bolt GR8 1-8 x 4.75 w Hole	91257A964-K	4
9	Section Moldboard Wing Assembly 2	SM2-W	2
10	Top Cover 12 Aluminum	TC12	2
11	Top Cover 24 Aluminum	TC24	4
12	Cutting edge 3/4" x 8" x 7'	SBCSD84	2
13	SnowDozer 6 FT Center Blade Assembly (Loader Pivot Frame)	SDC6(HEG1)	1
14	Slotted Nut 1-8	97190A040-K8	4
15	Access Panel	AP100	1
16	Flange Hex Bolt 3/8-16 x 1 Self Tapping	93882A657	76
17	Back Cover 24 Wing	BC24-W	4
18	Back Cover 6 Foot SD Moldboard	BC12	2
19	Hex Nylock 1-8	95615A320	21
21	Oil Resistant Buna_N O-Ring 3_8	9452K338	76

Weight LBS 4679

Copyright Kage Innovation All Rights Reserved www.kageinnovation.com (844) 314-KAGE

SnowDozer 16 FT Blade w_ Floating Quick Attach
BP16
Version # 1
Version Starting Serial #

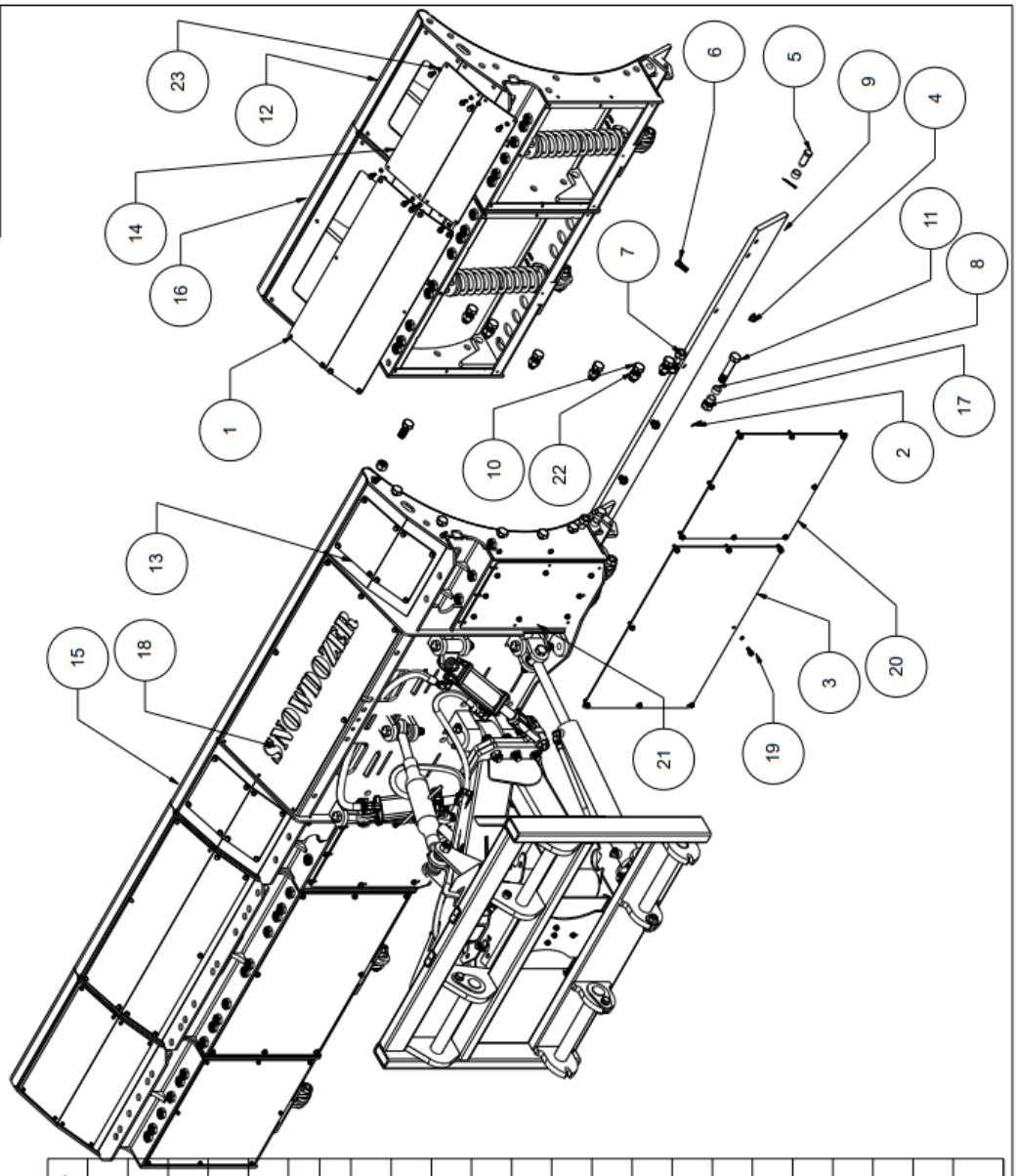

Item	Part Name	Part Number	Quantity
1	Top Cover 36 ALuminum	TC36	2
2	Cotter Pin 3/ 16 x 2	98338A516	6
3	Back Cover 36 Wing	BC36-W	2
4	Flange Locknut 5/ 8-11	3221357	20
5	Clevis Pin	98306A677	2
6	Plow Bolt 5/ 8-11 x 2 1/ 2"	90934A804	20
7	Hex Bolt Gr8 1-8 x 3.5	91257A959	4
8	Stop Bushing	909-4	12
9	Cutting edge 3/ 4" x 8" x 8'	SBCSD96	2
10	HEX BOLT GR8 1-8 x 2.25	92620A954	18
11	Hex Bolt GR8 1-8 x 4.75 w Hole	91257A964-K	4
12	Section Moldboard Wing Assembly 2	SM2-W	2
13	Top Cover 12 Aluminum	TC12	2
14	Top Cover 24 Aluminum	TC24	2
15	SnowDozer 6 FT Center Blade Assembly (Loader Pivot Frame)	SDC6(HEG1)	1
16	Section Moldboard Wing Assembly 3	SM3-W	2
17	Slotted Nut 1-8	97190A040-K8	4
18	Access Panel	AP100	1
19	Flange Hex Bolt 3/ 8-16 x 1 Self Tapping	93882A657	105
20	Back Cover 24 Wing	BC24-W	2
21	Back Cover 6 Foot SD Moldboard	BC12	2
22	Hex Nylock 1-8	95615A320	21
23	Oil Resistant Buna_N O-Ring 3_8	9452K338	105

Weight LBS 4679

Copyright Kage Innovation All Rights Reserved www.kageinnovation.com (844) 314-KAGE

SnowDozer 18 FT Blade w_ Floating Quick Attach

BP18

Version # 1

Version Starting Serial #

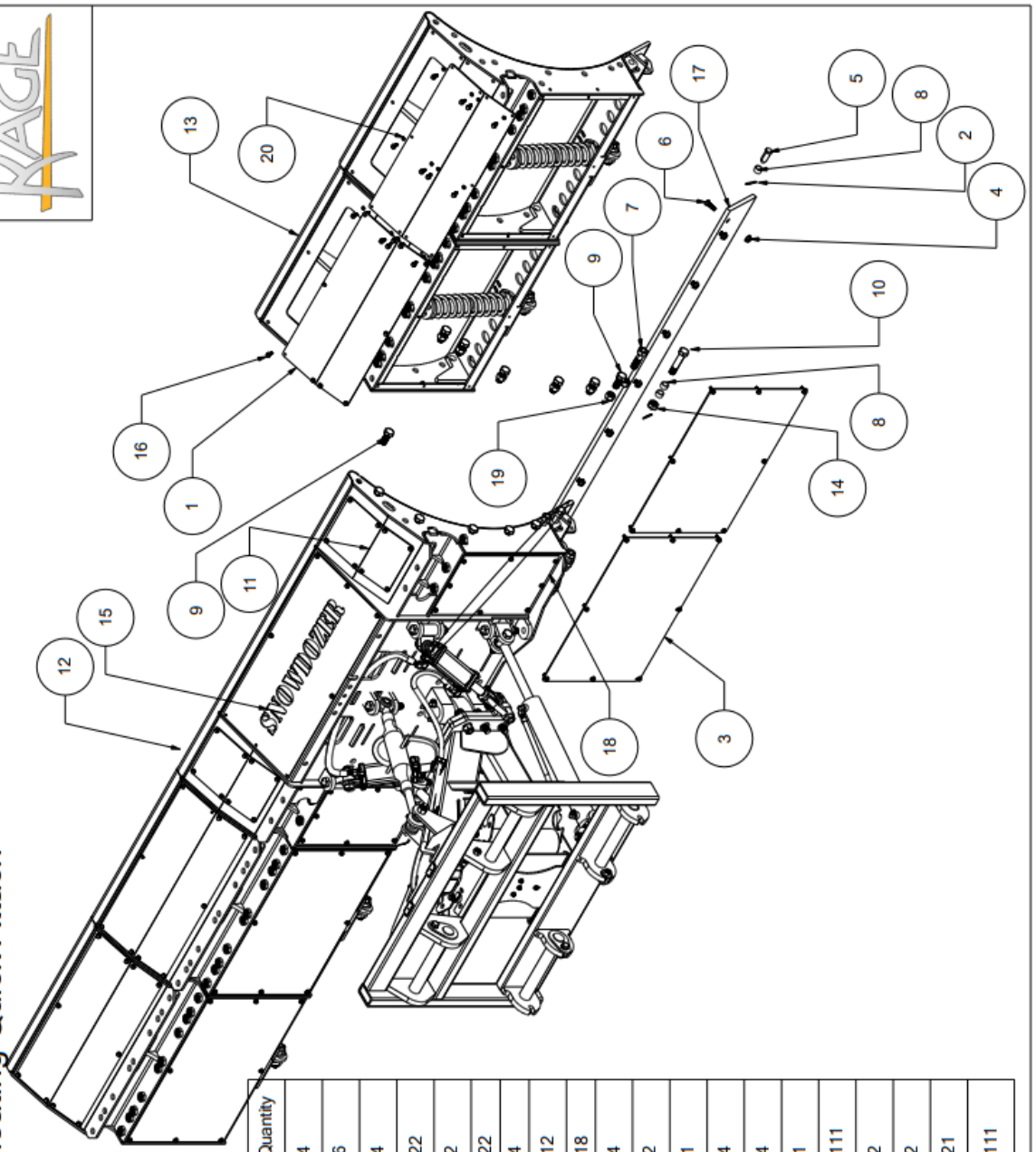

Item	Part Name	Part Number	Quantity
1	Top Cover 36 ALuminum	TC36	4
2	Cotter Pin 3/ 16 x 2	98338A516	6
3	Back Cover 36 Wing	BC36-W	4
4	Flange Locknut 5/ 8-11	3221357	22
5	Clevis Pin	98306A677	2
6	Plow Bolt 5/ 8-11 x 2 1/ 2"	90934A804	22
7	Hex Bolt Gr8 1-8 x 3.5	91257A959	4
8	Stop Bushing	909-4	12
9	HEX BOLT GR8 1-8 x 2.25	92620A954	18
10	Hex Bolt GR8 1-8 x 4.75 w Hole	91257A964-K	4
11	Top Cover 12 Aluminum	TC12	2
12	SnowDozer 6 FT Center Blade Assembly (Loader Pivot Frame)	SDO6(HEG1)	1
13	Section Moldboard Wing Assembly 3	SM3-W	4
14	Slotted Nut 1-8	97190A040-K8	4
15	Access Panel	AP100	1
16	Flange Hex Bolt 3/ 8-16 x 1 Self Tapping	93882A657	111
17	Cutting edge 3/ 4" x 8" x 9'	SBCSD108	2
18	Back Cover 6 Foot SD Moldboard	BC12	2
19	Hex Nylock 1-8	95615A320	21
20	Oil Resistant Buna_N O-Ring 3_8	9452K338	111

Weight LBS 4679

Copyright Kage Innovation All Rights Reserved www.kageinnovation.com (844) 314-KAGE

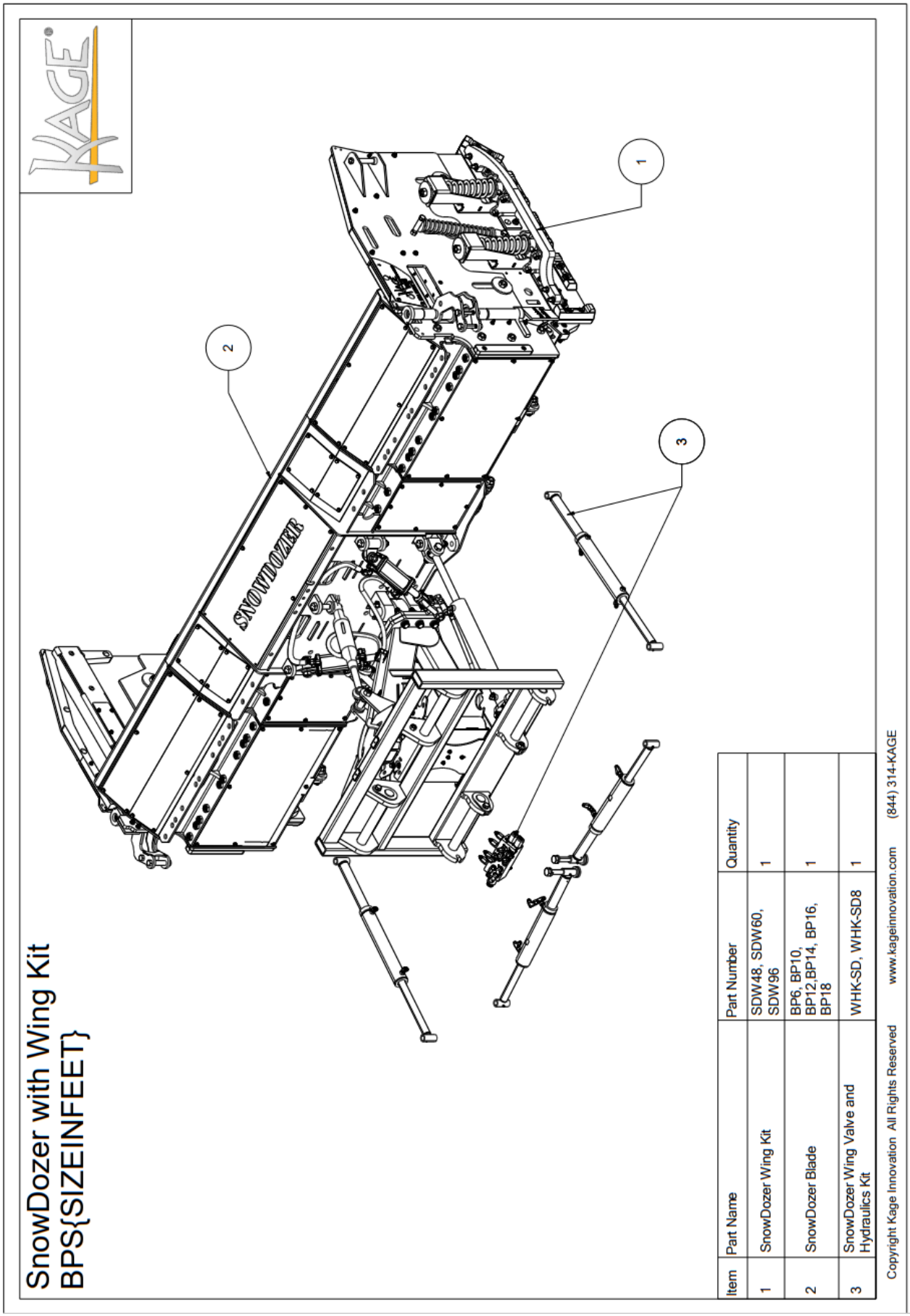
SnowDozer with Wing Kit
BPS{SIZEINFEET}
SNOWDOZER
1
2
3
Item
Part Name
Part Number
Quantity
1
SnowDozer Wing Kit
SDW48, SDW60, SDW96
1
2
SnowDozer Blade
BP6, BP10, BP12,BP14, BP16, BP18
1
3
SnowDozer Wing Valve and Hydraulics Kit
WHK-SD, WHK-SD8
1
Copyright Kage Innovation All Rights Reserved
www.kageinnovation.com
(844) 314-KAGE

SnowDozer 6 FT Center Blade Assembly (Loader Pivot Frame)
SDC6(HEG1)

Version#

Version Starting Serial #

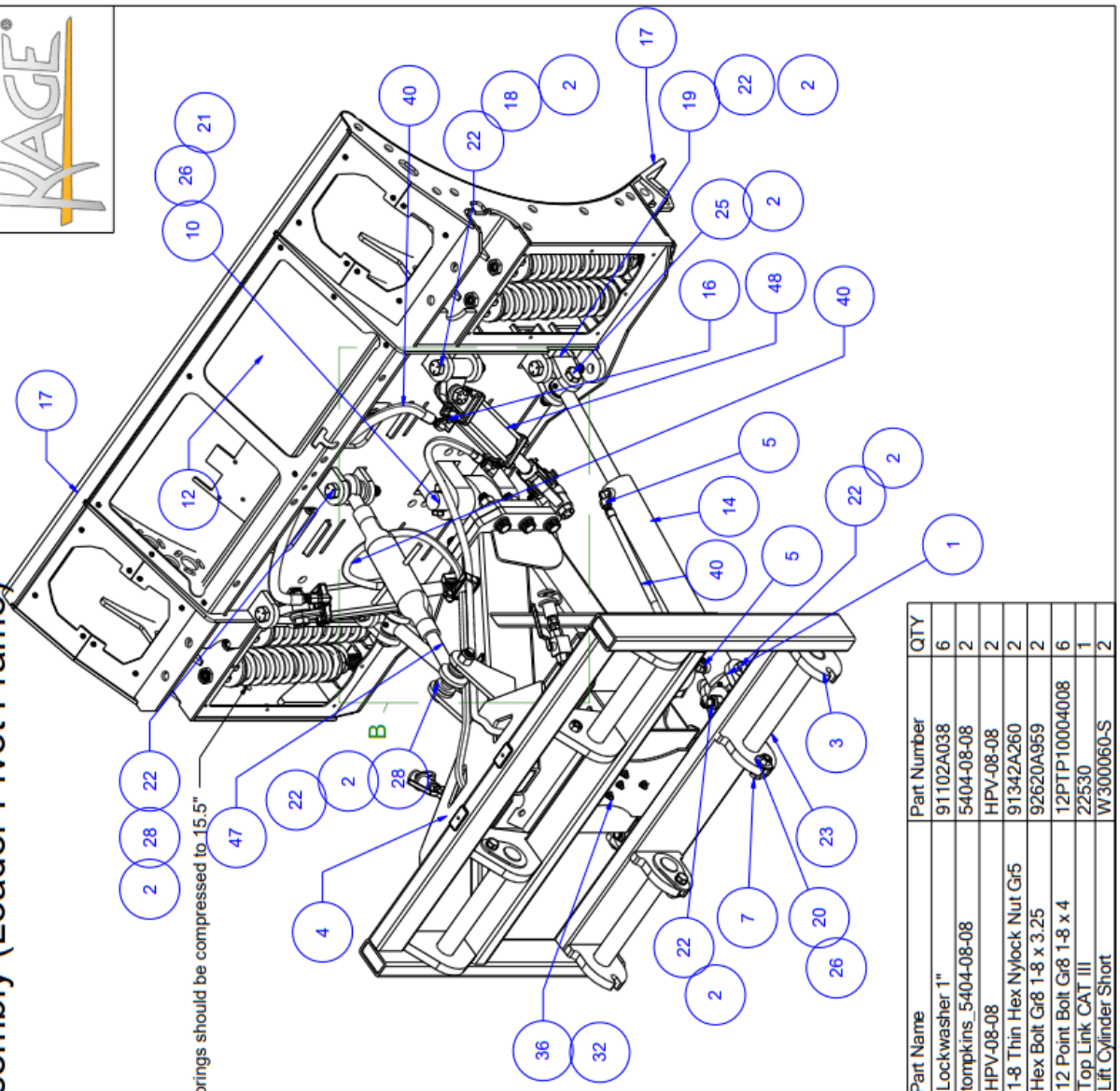

Item	Part Name	Part Number	QTY
1	Cylinder Link Rear	CLR10	2
2	Hex Nylock Nut 1-8	95615A320	21
3	PIVOT FRAME GROUP	KBW-P	1
4	Hose Clamp Assy	T3014T	1
5	JIC x Pipe 90 adaptor	2501-08-08	4
6	CAT II Reducer Bushing	21192	2
7	Hex Bolt GR5 3/ 4-10 x 2.25	92865A844	2
8	Flange Hex Bolt 1/ 2 - 13 x 1	92979A463	1
9	Hex Bolt GR8 1-8 x 5.5	91257A967	2
10	King Pin Weldment	KPW16	1
11	Hex Bolt GR5 3/ 4-10 x 2	92865A843	2
12	Accumulator	A4N0116D656Q	2
13	Oscillation Link	OLW10	2
14	Hydraulic Cylinder 8320	PMC-8320	2
15	Split Lockwasher, 1/2	ROC-8076-033	6
16	Elbow 90 1/ 2 MJIC x 1/ 2 MSAE	6801-NWO-08-08	4
17	SD Moldboard Assembly 6	SDM6	1
18	Cylinder Link Tilt	CLT10	2
19	Cylinder Link Front	CLF10	2
20	3/ 4" Flat Washer	90108A036	2
21	Hex Bolt GR8 3/ 4-10 x 3.25"	91257A848	1
22	Hex Bolt 1-8 x 6.5	91247A929	10
23	Float Pin	67-001	4
24	Flat Washer 1/ 2	ROC-8071-033	6
25	Hex Bolt GR8 1-8 x 5	91257A965	2
26	CenterLocknut GR2 3/ 4-10	90040A147-K5	5
27	Pivot Frame Adaptor	PFA4	1
28	1-.375 washer	13W	6
29	Lockwasher 3/ 4	91102A036	4
30	Hex Bolt 1/ 2 - 20 x 1	92865A352	6
31	Male Ag Coupler	19-400	2
32	Flange Hex Bolt 3/ 8 - 16 - 1.25	92979A348	4
33	Male 08 JIC x Male 08 Pipe x Male 08 JIC	2605-08-08-08	2
34	SAE Flat Washer 1 x 2	90126A038	6
35	JIC 08 x JIC 08 Elbow 45	6502-08-08	2
36	Flange Locknut, 3_8 -16	93298A130	4
37	Accumulator Bracket	200-1985	1
38	O-Ring to JIC Swivel 08x08	6402-08-08	2
39	Coupler Dust Cap	5341K73	2
40	Transfer Line	1-640	4

Item	Part Name	Part Number	QTY
41	Lockwasher 1"	91102A038	6
42	tompkins_5404-08-08	5404-08-08	2
43	HPV-08-08	HPV-08-08	2
44	1-8 Thin Hex Nylock Nut Gr5	91342A260	2
45	Hex Bolt Gr8 1-8 x 3.25	92620A959	2
46	12 Point Bolt Gr8 1-8 x 4	12PTP10004008	6
47	Top Link CAT III	22530	1
48	Lift Cylinder Short	W300060-S	2

WEIGHT LBS

Copyright Kage Innovation All Rights Reserved www.kageinnovation.com (844) 314-KAGE

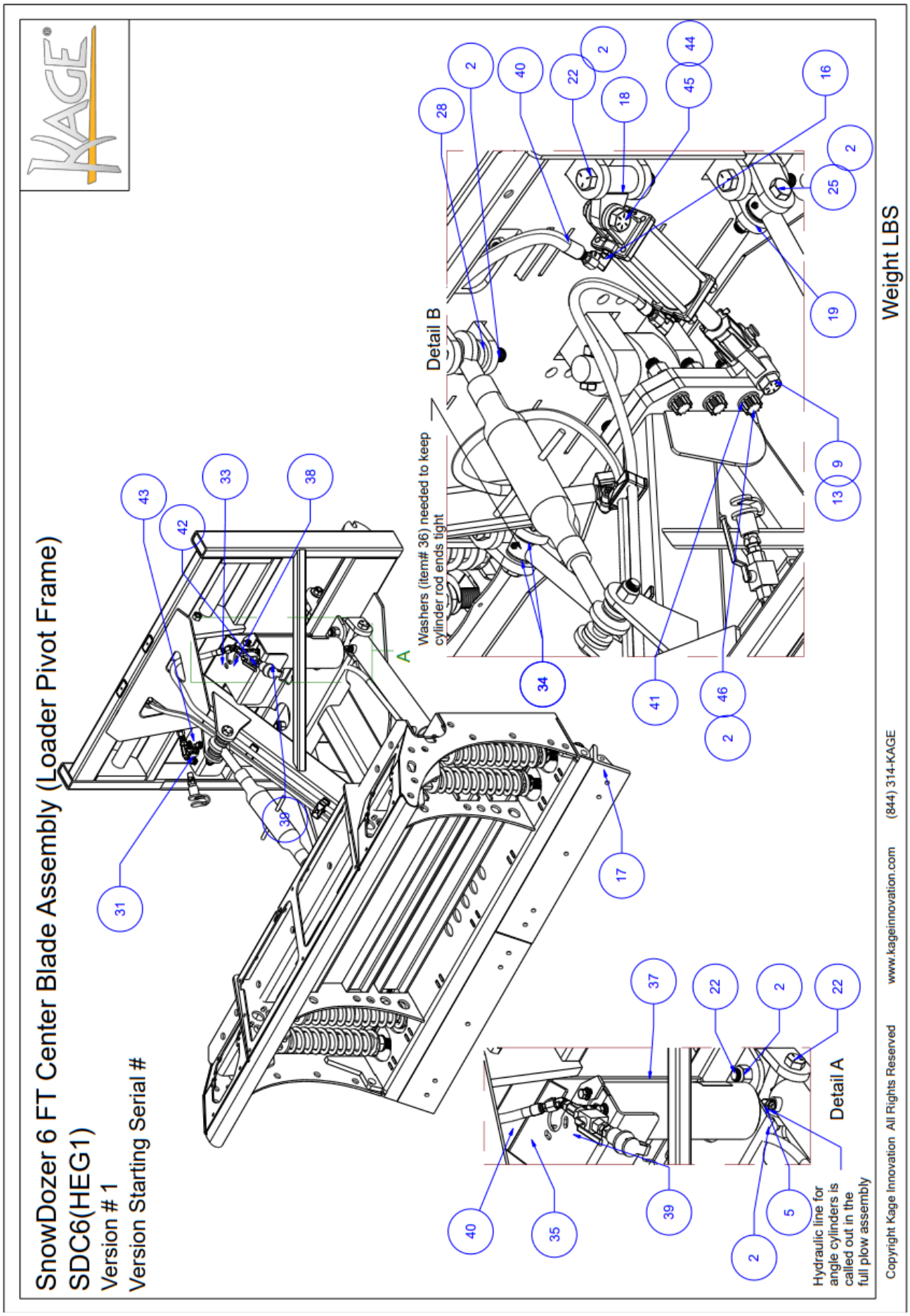
SnowDozer 6 FT Center Blade Assembly (Loader Pivot Frame)
SDC6(HEG1)
Version # 1
Version Starting Serial #
Detail B
Washers (item# 36) needed to keep cylinder rod ends tight
Detail A
Hydraulic line for angle cylinders is called out in the full plow assembly
Weight LBS
Copyright Kage Innovation All Rights Reserved
www.kageinnovation.com
(844) 314-KAGE

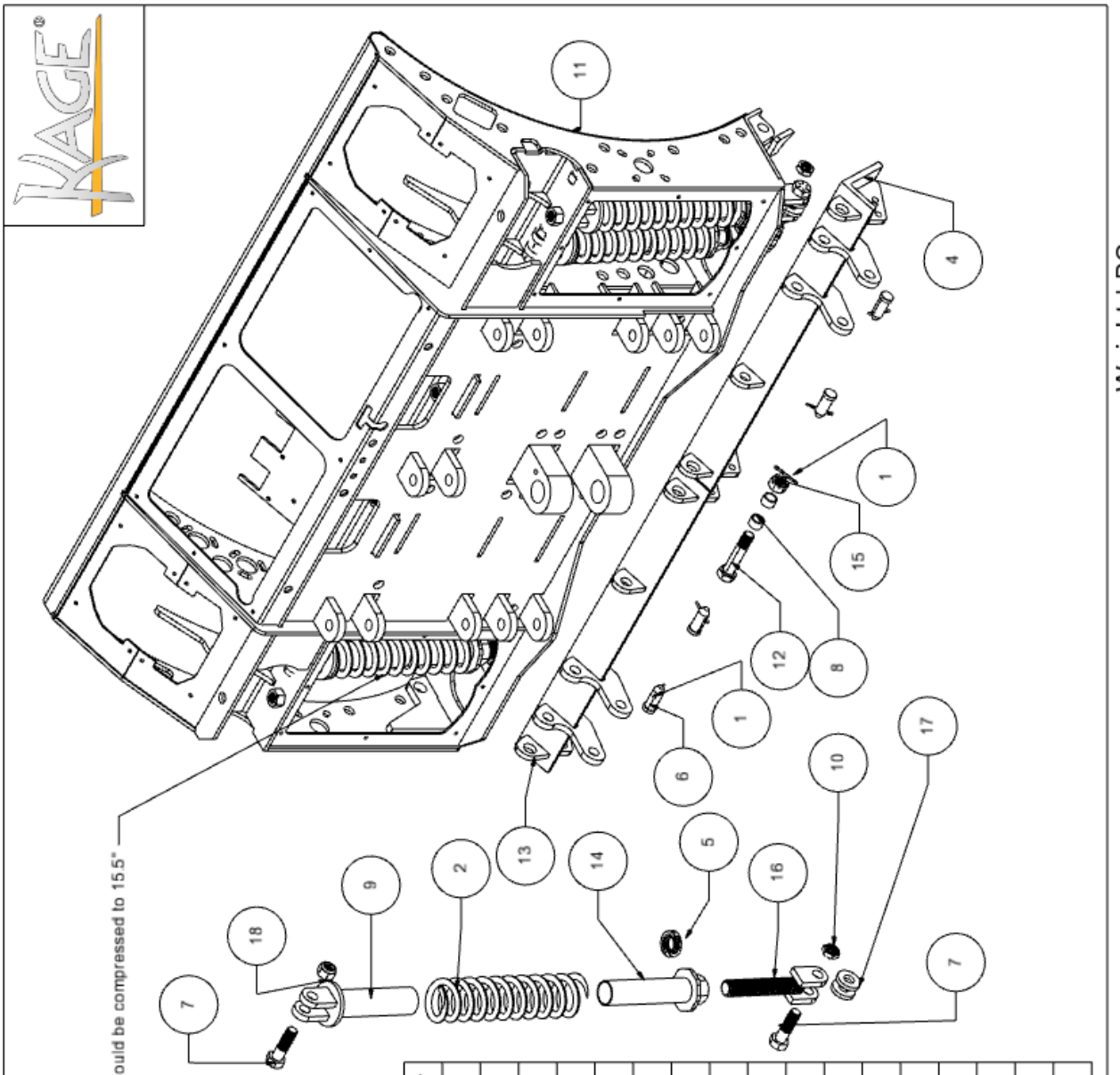

SD Moldboard Assembly 6

SDM6

Version #

Version Starting Serial #

Item	Part Name	Part Number	Quantity
1	Cotter Pin 3/16 x 2	98338A516	7
2	SS Coil Spring	5890032	4
4	SD Base Angle 36 Weldment Passenger	BA36WP	1
5	Two-Piece Clamping Acme Lead Screw Collar	2207N18	4
6	Clevis Pin	98306A677	6
7	Hex Bolt Gr8 1-8 x 3.5	91257A959	7
8	Stop Bushing	909-4	2
9	Spring Top 16	ST16-8	4
10	1-8 Thin Hex Nylock Nut Gr5	91342A260	4
11	SnowDozer Moldboard Weldment 6	BPMW6	1
12	Hex Bolt GR8 1-8 x 4.75 w Hole	91257A964-K	1
13	SD Base Angle 36 Weldment Driver	BA36W-D	1
14	Spring Bottom 16	SB16-8	4
15	Slotted Nut 1-8	97190A040-K8	1
16	Trip Spring Rod Weldment	TSRW	4
17	1-.375 washer	13W	8
18	Hex Nylock 1-8	95615A320	4

Weight LBS

Copyright Kage Innovation All Rights Reserved www.kageinnovation.com (844) 314-KAGE

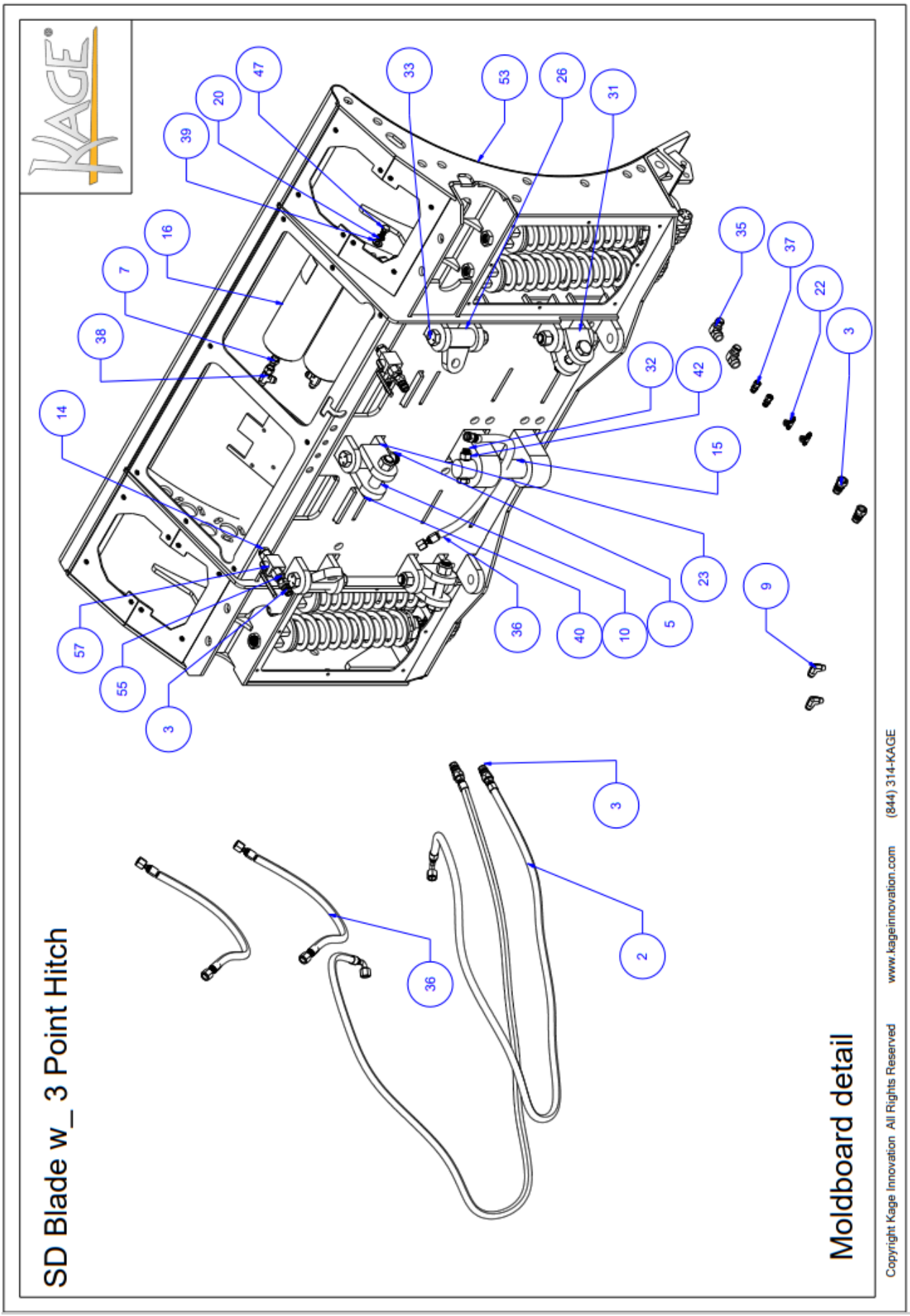
SD Blade w_ 3 Point Hitch
Moldboard detail
Copyright Kage Innovation All Rights Reserved
www.kageinnovation.com
(844) 314-KAGE
KAGE
47
20
39
33
53
26
31
16
7
38
14
35
37
22
3
32
42
15
23
9
5
10
40
36
57
55
3
3
36
2

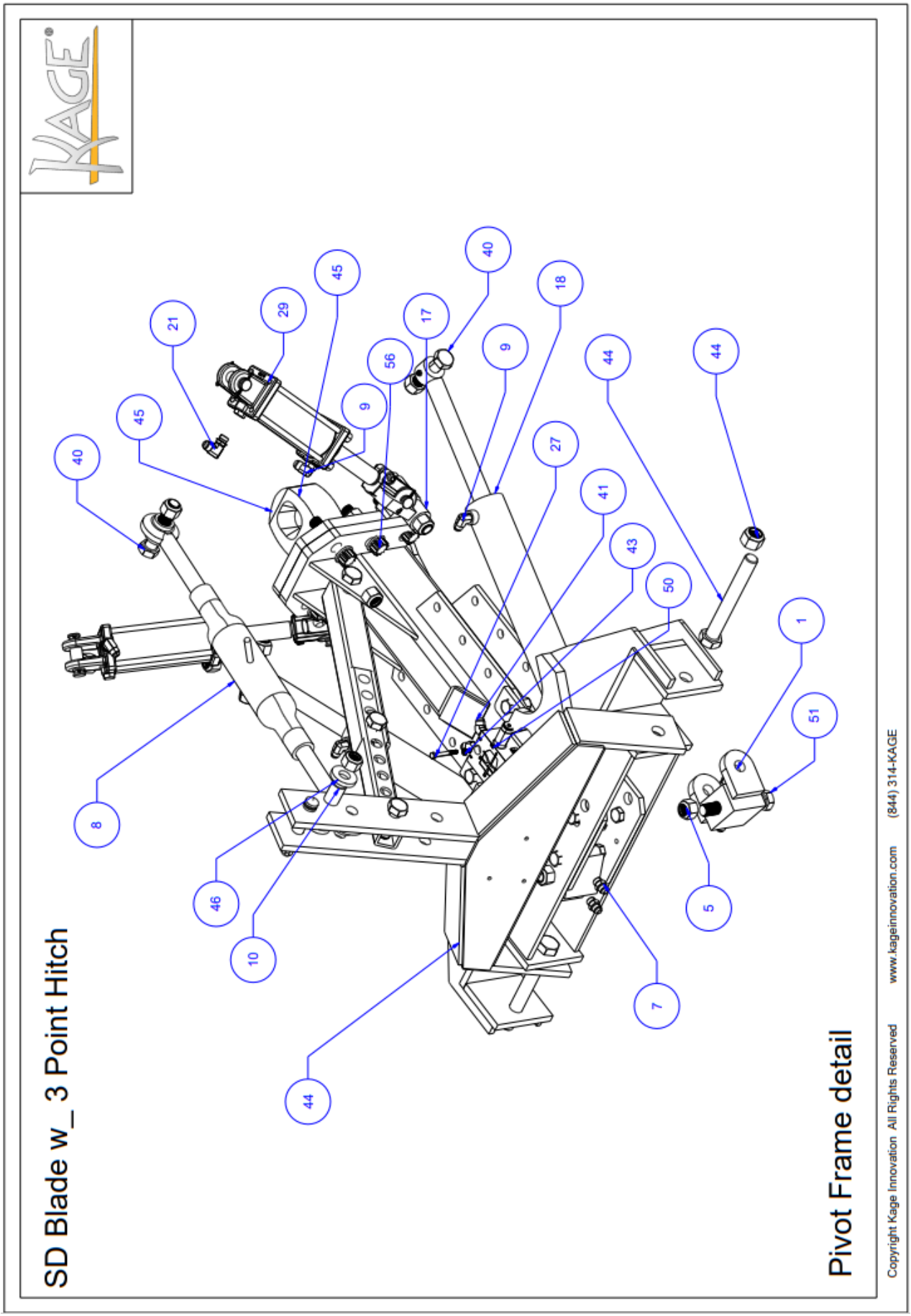
SD Blade w_ 3 Point Hitch
Pivot Frame detail
Copyright Kage Innovation All Rights Reserved
www.kageinnovation.com
(844) 314-KAGE
40
45
21
29
45
17
40
18
56
9
9
44
44
27
41
43
50
1
51
5
7
8
46
10
44

SD Blade w_ 3 Point Hitch

Item	Part Name	Part Number	Quantity	Item	Part Name	Part Number	Quantity
1	Cylinder Link Rear	CLR10	2	32	Hex Bolt GR8 3/4-10 x 3.25"	91257A848	1
2	Hydro Line, Pass	HY-707	2	33	Hex Bolt 1-8 x 6.5	91247A929	7
3	Male Ag Coupler	19-400	6	35	Female JIC 08 x Female NPT 08 90Elbow	6503-08-08	2
5	Hex Nylock Nut 1-8	95615A320	20	36	Hydro Line Cylinder Bridge	HY-209	3
7	JIC x ORB Straight	6400-0-08-08	4	37	JIC Extender Swivel 04x06	6504-04-06	2
8	Top Link CAT III	22530	1	38	JIC x JIC x JIC Tee	6602-08-08-08	2
9	JIC x Pipe 90 adaptor	2501-08-08	8	39	Flat Washer 1/2	ROC-8071-033	6
10	CAT II Reducer Bushing	21192	2	40	Hex Bolt GR8 1-8 x 5	91257A965	3
11	Flange Hex Bolt 1/2 - 13 x 1	92979A463	1	41	ORB x JIC 45 Elbow	6802-NWO-08-08	2
12	Hex Bolt GR8 1-8 x 5.5	91257A967	2	42	CenterLocknut GR2 3/4-10	90040A147-K5	1
14	JIC Bulkhead Union - Locknut 08x08	2700-08-08	2	43	Lockwasher, 5/16	ROC-8076-030	2
15	King Pin Weldment	KPW16	1	44	SD 3 Point Pivot Frame Kit	KT-560	1
16	Accumulator	A4N0116D656Q	2	45	Pivot Frame Adaptor	PFA4	1
17	Oscillation Link	OLW10	2	46	1-.375 washer	13W	2
18	Hydraulic Cylinder 8320	PMC-8320	2	47	Hex Bolt 1/2 - 20 x 1	92865A352	6
20	Split Lockwasher, 1/2	ROC-8076-033	6	50	Crossover Valve 2500	CRV-2500	1
21	Elbow 90 1/2 MJIC x 1/2 MSAE	6801-NWO-08-08	2	51	Hex Bolt GR8 1-8 x 6.5	91257A970	2
22	JIC Tee 04 x 04 x 04	6600-04-04-04	2	53	SD Moldboard Assembly 6	SDM6	1
23	Cylinder Link Center	CLC10	1	54	Lockwasher 1"	91102A038	6
26	Cylinder Link Tilt	CLT10	2	55	tompkins_5404-08-08	5404-08-08	2
27	Hex Bolt GR5 5/16-18 x 2.5	91247A593	2	56	12 Point Bolt Gr8 1-8 x 4	12PTP10004008	6
29	Lift Cylinder Short	W300060-S	2	57	HPV-08-08	HPV-08-08	2
30	Crossover Line	HY-701-ORB	6				
31	Cylinder Link Front	CLF10	2				

Copyright Kage Innovation All Rights Reserved www.kageinnovation.com (844) 314-KAGE

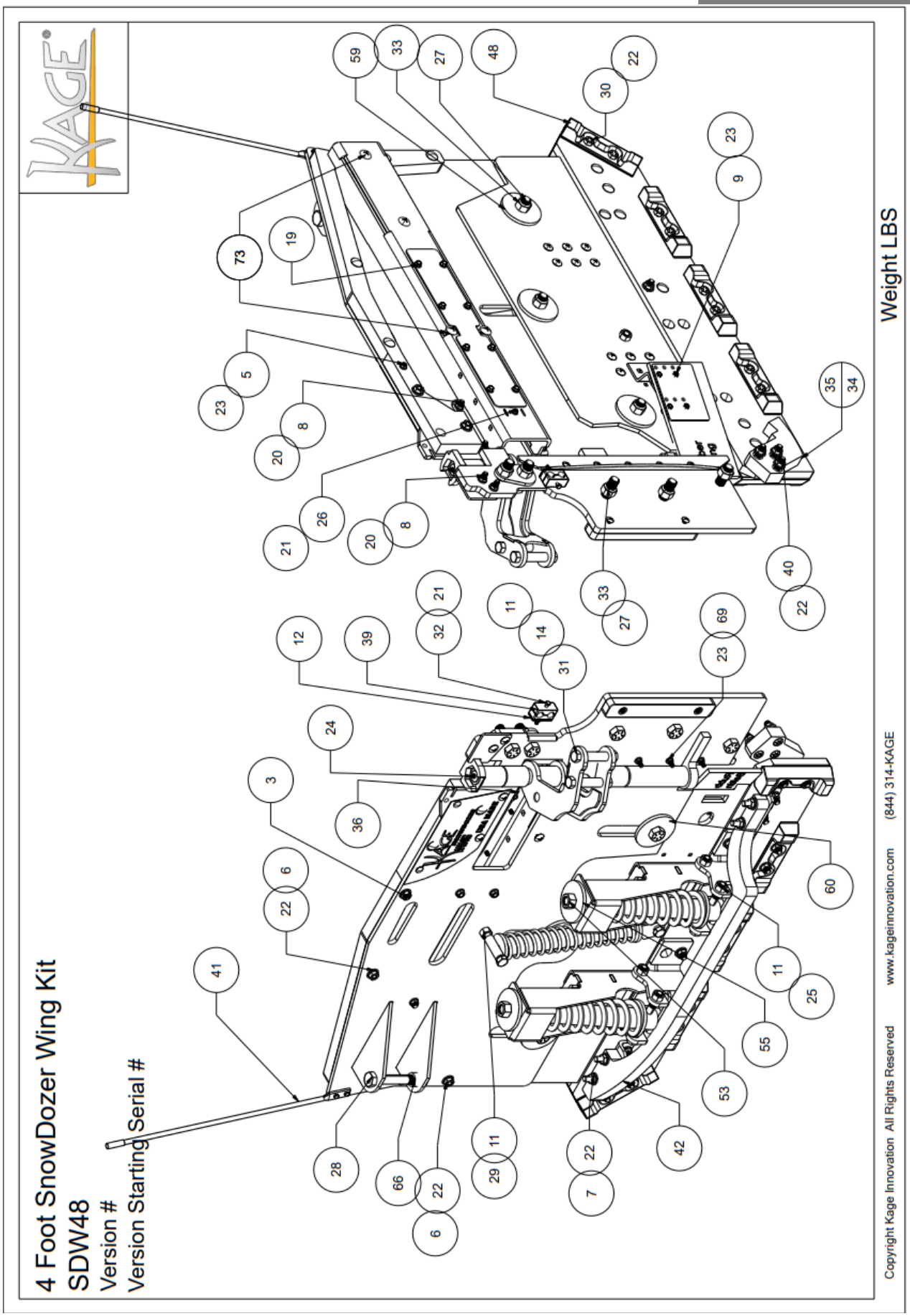
4 Foot SnowDozer Wing Kit
SDW48
Version #
Version Starting Serial #
Weight LBS
Copyright Kage Innovation All Rights Reserved
www.kageinnovation.com
(844) 314-KAGE

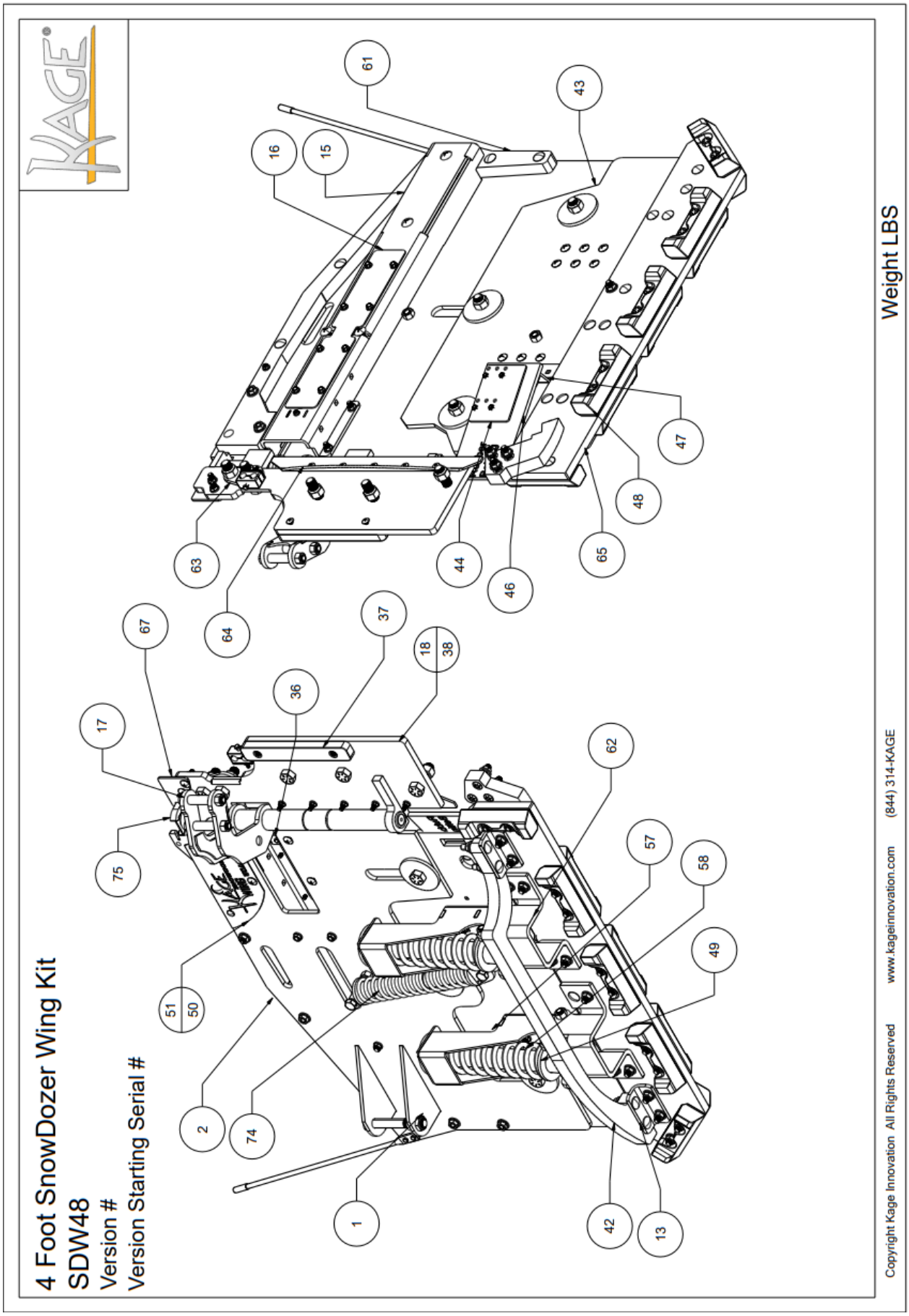
4 Foot SnowDozer Wing Kit
SDW48
Version #
Version Starting Serial #
Weight LBS
Copyright Kage Innovation All Rights Reserved
www.kageinnovation.com
(844) 314-KAGE
1
2
13
15
16
17
18
36
37
38
42
43
44
46
47
48
49
50
51
57
58
61
62
63
64
65
67
74
75

Item	Part Name	Part Number	Quantity
1	1-8 Thin Hex Nylock Nut Gr5	91342A260	2
2	4 FT SD Wing Side Panel Weldment	200-1200	2
3	Carriage bolt 1/ 2 - 13 x 2.5	90185A722	2
5	Carriage Bolt 3_8-16 x 2.5	90185A634	2
6	Carriage Bolt 5/ 8-11 x 2.5	90185A814	40
7	Carriage Bolt 5/ 8-11 x 3	90185A818	8
8	Carriage Bolt Gr5 1/ 2-13 x 2	90185A720	36
9	Carriage Bolt GR5 3/ 8-16 x 1.25	ROC-2131-626	10
10	Carriage Bolt GR5 3_8-16 x 2	90185A632	4
11	CenterLocknut GR2 3/ 4-10	90040A147-K5	20
12	Cover Plate	TC3	2
13	Cutting Edge Bracket	200-9200	4
14	Cylinder Bushing Wing SS	200-9334	4
15	Cylinder Channel	200-7600	2
16	Cylinder Channel Cover	200-8750	2
17	Cylinder Swing Arm	200-4900	2
18	Driver Hinge Adapter	200-8100	2
19	Flange Hex Bolt 3/ 8 - 16 x 1	92979A344	16
20	Flange Locknut 1/ 2 - 13	RF1213OFZ	44
21	Flange Locknut 5/ 16-18	92018A320	4
22	Flange Locknut 5/ 8-11	3221357	70
23	Flange Locknut, 3_8 -16	93298A130	26
24	Grease Zerk, 3/ 8-24	1095K96	2
25	Hex Bolt GR5 3/ 4-10 x 7	91247A861	8
26	Hex Bolt GR5 5/ 16 - 18 x 2	91247A591	2
27	Hex Bolt Gr8 1-8 x 3.25	92620A959	16
28	Hex Bolt GR8 1-8 x 7	91257A973	2
29	Hex Bolt GR8 3/ 4-10 x 5.5	91257A857	4
30	Hex Bolt GR8 5/ 8-11 x 3.5	92620A808	16
31	Hex Bolt GR9 3/ 4-10 x 5	90201A660	4
32	Hex Bolt, 5/ 16 - 18 x 3	91247A595	2
33	Hex Nylock 1-8	95615A320	16
34	Hinge Block	200-9700	2
35	Hinge Block AE	200-9710	2
36	Hose Clamp 2 IN	200-7991	2

Item	Part Name	Part Number	Quantity
37	Isolator	N24-2	2
38	Passenger Hinge Adapter	200-8200	1
39	Plastic Hose Block	T3014C	4
40	Plow Bolt 5/ 8-11 x 3	90934A806	6
41	Plow Guide	W-1578	1
42	Rub Bar 48	200-2400	2
43	SD Float Plate	200-8900	2
44	SD Snow Catch Support	200-7118	2
46	SD Wing Snow Catch	200-7500	2
47	SD Wing SnowCatch Bracket	200-9766	2
48	SF Curb Guard	100-11	18
49	Single Tower Spring Tube	200-1600	4
50	SnowDozer Wing Emblem Driver	200-4110	1
51	SnowDozer Wing Emblem Passenger	200-4112	1
53	Spring Bolt	23-000	4
55	Spring Puck	200-7300	4
57	Spring Tower Weldment	200-7800	4
58	SS Coil Spring	5890032	4
59	Super Slide Washer	200-7599	6
60	T Washer	200-1400	6
61	Tip Support	200-7900	2
62	Trip Box	200-9300	4
63	Wing Bolt Connector	200-4255	2
64	Wing Clam	200-7887	2
65	Wing Cutting Edge 48	200-4800	2
66	Wing Cylinder Bushing	200-4669	2
67	Wing Pin Retainer	200-8625	2
69	Carriage Bolt GR5 3_8-16 x 1.75	90185A630	10
71	Spring Bottom L	SP800	2
72	Spring Top L	SP900	2
73	Carriage Bolt 5/ 8-11 x 4.5	90185A830	8
74	Spring 17	SP21	2
75	SD Wing Pin Weldment (Sensor)	400-2009	2

Copyright Kage Innovation All Rights Reserved www.kageinnovation.com (844) 314-KAGE

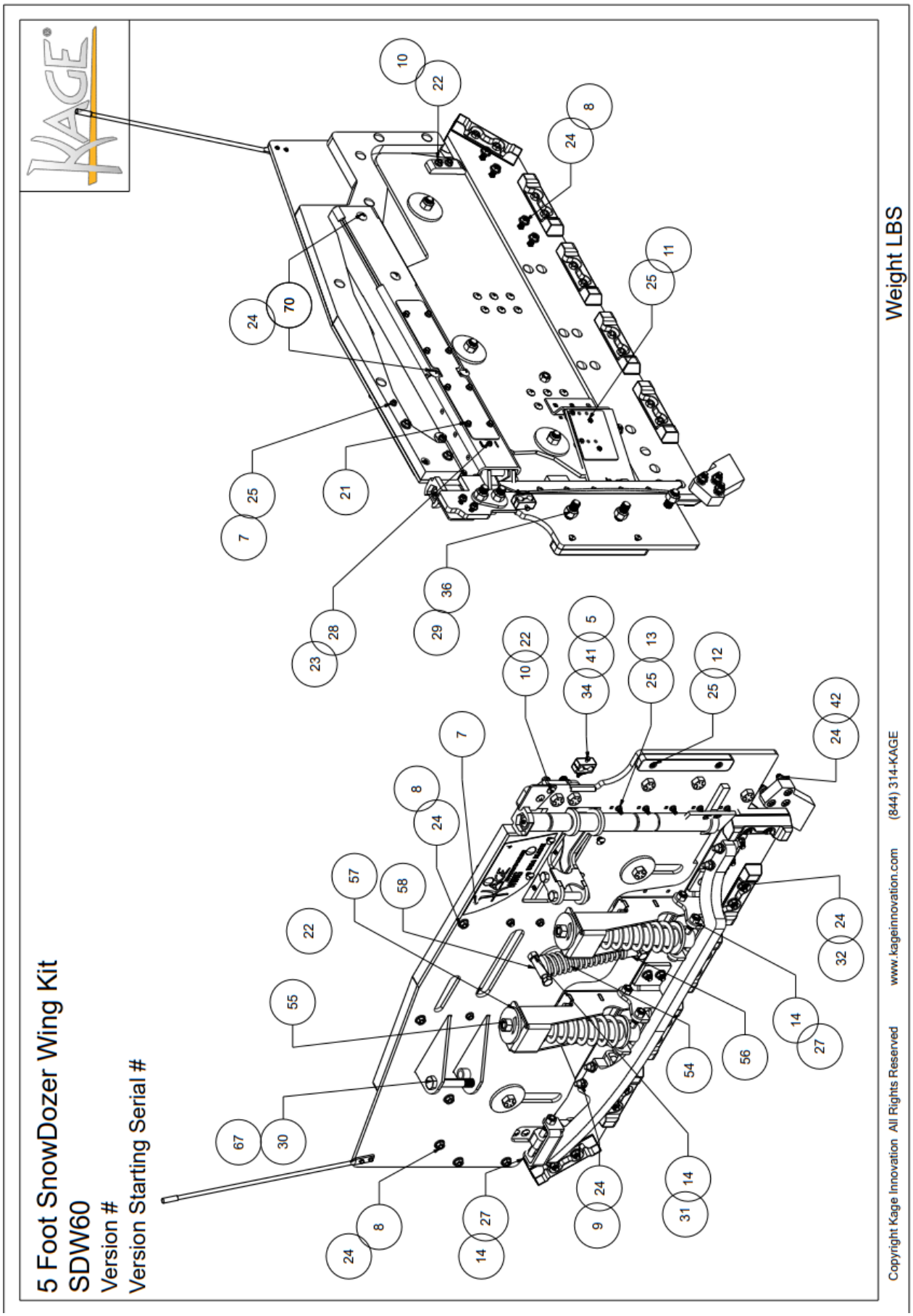
5 Foot SnowDozer Wing Kit
SDW60
Version #
Version Starting Serial #
Weight LBS
Copyright Kage Innovation All Rights Reserved
www.kageinnovation.com
(844) 314-KAGE

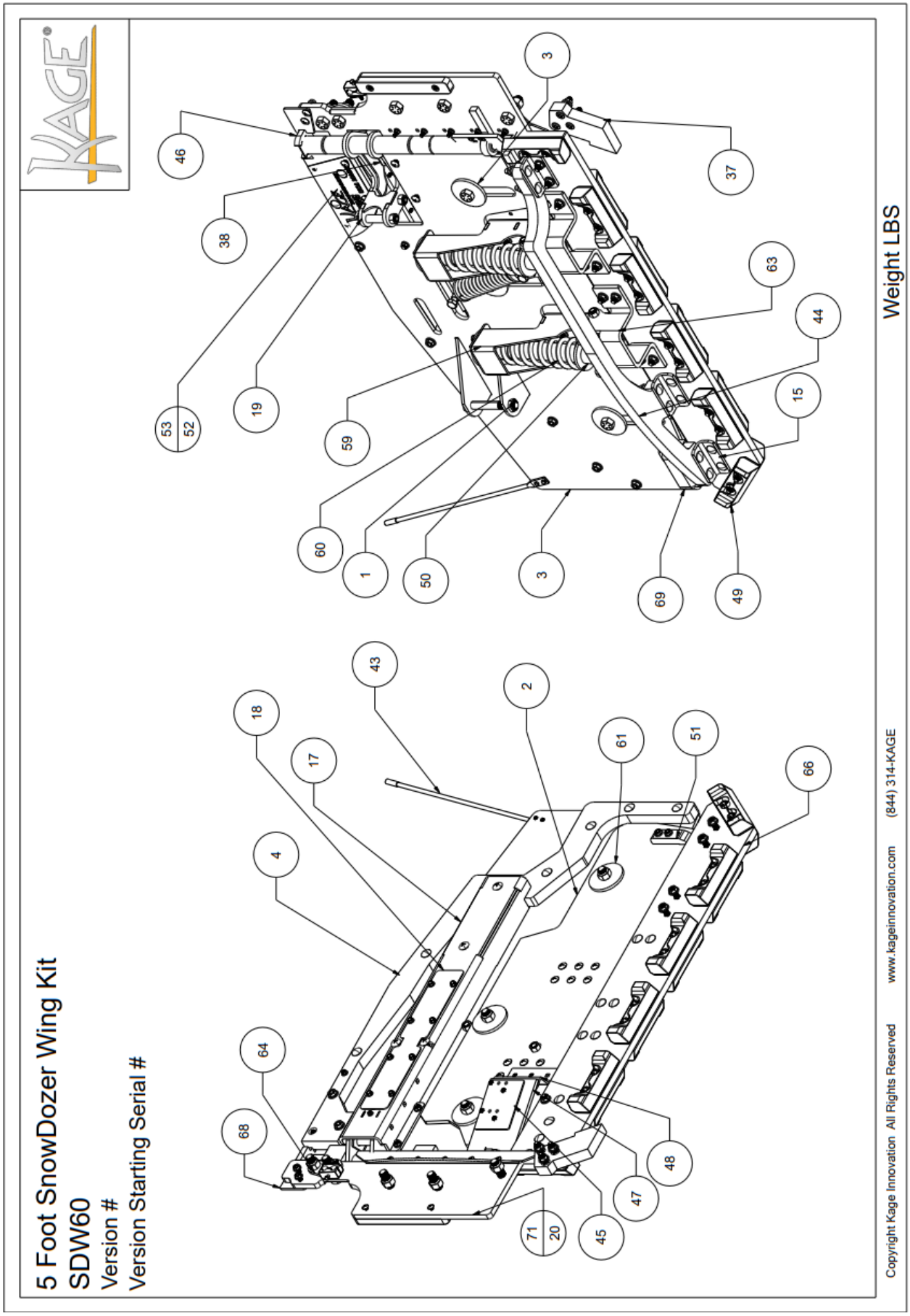
5 Foot SnowDozer Wing Kit
SDW60
Version #
Version Starting Serial #
Weight LBS
Copyright Kage Innovation All Rights Reserved
www.kageinnovation.com
(844) 314-KAGE
3
37
46
38
63
44
53
52
19
15
59
60
1
50
3
69
49
43
2
18
17
61
51
66
4
64
68
71
20
45
47
48

5 Foot SnowDozer Wing Kit
SDW60

Item	Part Name	Part Number	Quantity
1	1-8 Thin Hex Nylock Nut Gr5	91342A260	2
2	5 FT SD Float Plate	200-8950	2
3	5 FT SD Wing Side Panel Weldment	200-1300	2
4	5 FT Tip Support	200-7950	2
5	Beta Clamp Cap	TC3	2
7	Carriage Bolt 3_8-16 x 2.5	90185A634	2
8	Carriage Bolt 5/8-11 x 2.5	90185A814	48
9	Carriage Bolt 5/8-11 x 3	90185A818	12
10	Carriage Bolt Gr5 1/2-13 x 2	90185A720	40
11	Carriage Bolt GR5 3/8-16 x 1.25	ROC-2131-626	8
12	Carriage Bolt GR5 3_8-16 x 2	90185A632	12
13	Carriage Bolts 3/8-16x1.75	90185A630	10
14	CenterLocknut GR2 3/4-10	90040A147-K5	22
15	Cutting Edge Bracket	200-9200	6
16	Cylinder Bushing Wing SS	200-9334	4
17	Cylinder Channel	200-7600	2
18	Cylinder Channel Cover	200-8750	2
19	Cylinder Swing Arm	200-4900	2
20	Driver Hinge Adapter	200-8100	1
21	Flange Hex Bolt 3/8 - 16 x 1	92979A344	16
22	Flange Locknut 1/2 - 13	RF1213OFZ	48
23	Flange Locknut 5/16-18	92018A320	4
24	Flange Locknut 5/8-11	3221357	86
25	Flange Locknut, 3_8 -16	93298A130	26
26	Grease Zerk, 3/8-24	1095K96	2
27	Hex Bolt GR5 3/4-10 x 7	91247A861	10
28	Hex Bolt GR5 5/16 - 18 x 2	91247A591	2
29	Hex Bolt Gr8 1-8 x 3.25	92620A959	16
30	Hex Bolt GR8 1-8 x 7	91257A973	2
31	Hex Bolt GR8 3/4-10 x 5.5	91257A857	4
32	Hex Bolt GR8 5/8-11 x 3.5	92620A808	20
33	Hex Bolt GR9 3/4-10 x 5	90201A660	4
34	Hex Bolt, 5/16 - 18 x 3	91247A595	2
35	Hex Nut GR5 1/2-13	95462A033	4

Item	Part Name	Part Number	Quantity
36	Hex Nylock 1-8	95615A320	16
37	Hinge Block	200-9700	2
38	Hose Clamp 2 IN	200-7991	2
39	Isolator	N24-2	2
41	Plastic Hose Block	T3014C	4
42	Plow Bolt 5/8-11 x 3	90934A806	6
43	Plow Guide	W-1578	2
44	Rub Bar 60	200-2500	2
45	SD Snow Catch Plate	200-7118	2
46	SD Wing Pin Weldment (Sensor)	400-2009	2
47	SD Wing Snow Catch	200-7500	2
48	SD Wing SnowCatch Bracket	200-9766	2
49	SF Curb Guard	100-11	22
50	Single Tower Spring Tube	200-1600	4
51	Skid Hinge Link	200-9500	2
52	SnowDozer Wing Emblem Driver	200-4110	1
53	SnowDozer Wing Emblem Passenger	200-4112	1
54	Spring 17	SP21	2
55	Spring Bolt	23-000	4
56	Spring Bottom L	SP800	2
57	Spring Puck	200-7300	4
58	Spring Top L	SP900	2
59	Spring Tower Weldment	200-7800	4
60	SS Coil Spring	5890032	4
61	Super Slide Washer	200-7599	6
62	T Washer	200-1400	6
63	Trip Box	200-9300	4
64	Wing Bolt Connector	200-4255	2
65	Wing Clam	200-7887	2
66	Wing Cutting Edge 60	200-6000	2
67	Wing Cylinder Bushing	200-4669	2
68	Wing Pin Retainer	200-8625	2
69	Wing Skid Hinge	200-9400	2
70	Carriage Bolt 5/8-11 x 4.5	90185A830	8
71	Passenger Hinge Adapter	200-8200	1

Copyright Kage Innovation All Rights Reserved www.kageinnovation.com (844) 314-KAGE

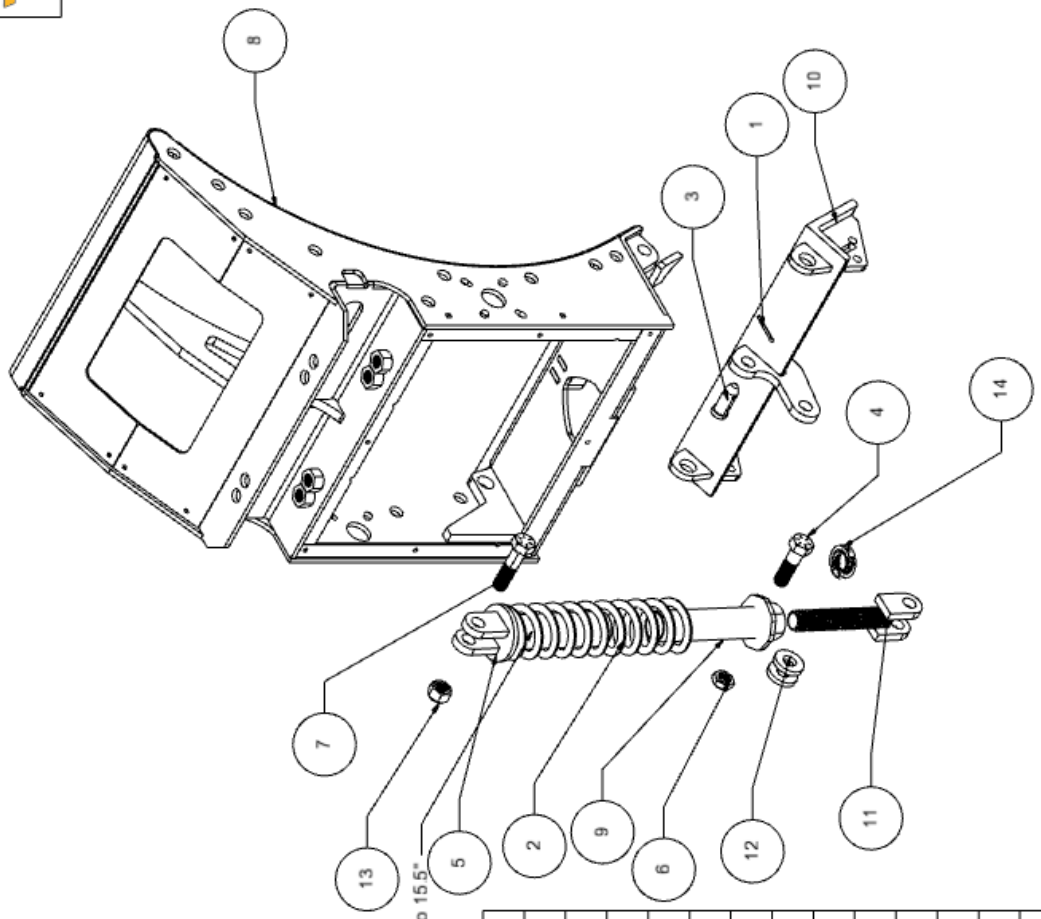

Section Moldboard Wing Assembly 2

SM2-W

Version # WING

Version Starting Serial #

Spring should be compressed to 15.5"

Item	Part Name	Part Number	Quantity
1	Cotter Pin 3/16 x 2	98338A516	1
2	SS Coil Spring	5890032	1
3	Clevis Pin	98306A677	1
4	Hex Bolt Gr8 1-8 x 3.5	91257A959	1
5	Spring Top 16	ST16-8	1
6	1-8 Thin Hex Nylock Nut Gr5	91342A260	1
7	Hex Bolt Gr8 1-8 x 4	91257A961	1
8	Section Moldboard Wing Weldment 2	SMW2-W	1
9	Spring Bottom 16	SB16-8	1
10	Base Angle 24 Weldment	BA24W	1
11	Trip Spring Rod Weldment	TSRW	1
12	1-.375 washer	13W	2
13	Hex Nylock 1-8	95615A320	1
14	Two-Piece Clamping Acme Lead Screw Collar	2207N18	1

Weight LBS

Copyright Kage Innovation All Rights Reserved www.kageinnovation.com (844) 314-KAGE

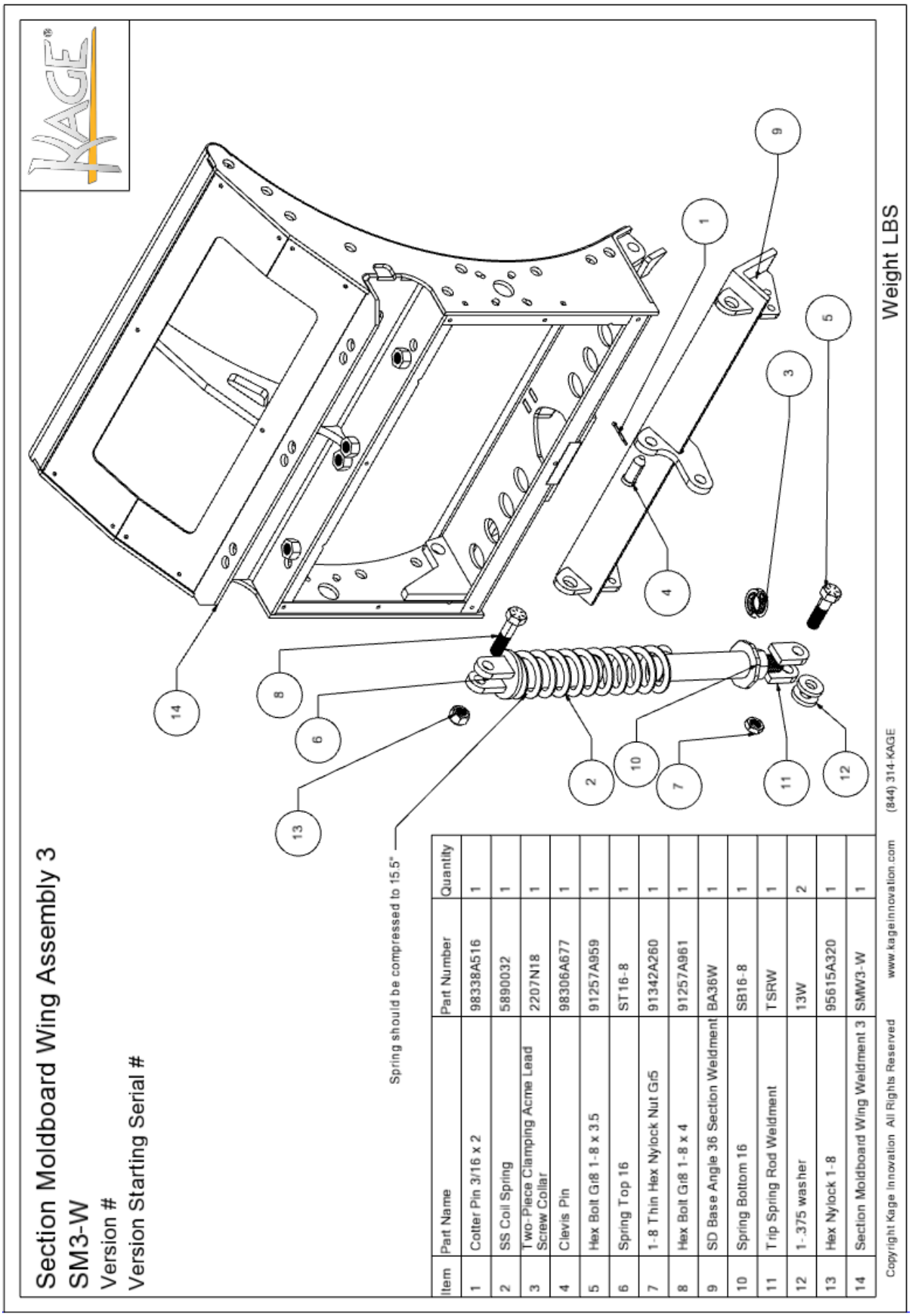

Item	Part Name	Part Number	Quantity
1	Cotter Pin 3/16 x 2	98338A516	1
2	SS Coil Spring	5890032	1
3	Two-Piece Clamping Acme Lead Screw Collar	2207N18	1
4	Clevis Pin	98306A677	1
5	Hex Bolt Gr8 1-8 x 3.5	91257A959	1
6	Spring Top 16	ST16-8	1
7	1-8 Thin Hex Nylock Nut Gr5	91342A260	1
8	Hex Bolt Gr8 1-8 x 4	91257A961	1
9	SD Base Angle 36 Section Weldment	BA36W	1
10	Spring Bottom 16	SB16-8	1
11	Trip Spring Rod Weldment	TSRW	1
12	1-.375 washer	13W	2
13	Hex Nylock 1-8	95615A320	1
14	Section Moldboard Wing Weldment 3	SMW3-W	1

WING Hydraulic Breakdown

Revision 2024.7.15

SnowDozer Wing Hydro Kit

Item	Part Name	Part Number	QTY
1	Wing Cylinder 2.5 x 26.25 x 10	K-24-3865-10	2
2	Hydro Coupler, Female	FEM-501-8FP-NL	1
3	Line Turn Cylinder to Bulkhead	HY-401	2
4	Hydro Coupler, Male	FEM-502-8FP	1
5	Wing Cylinder 2.5 x 34.25 x 14	K-24-3865-14	2
6	Wing Harness Plow Side	PWSD1100	1
7	Transfer Line	1-640	4
8	JIC Bulkhead Union - Locknut 08x08	2700-08-08	2
9	Fold Retract Line	HY-409	1
10	Elbow 90 1/2 MJIC x 1/2 MSAE	6801-NWO-08-08	4
11	Wing Harness Machine Side	MWSD1100	1
12	JIC Bulkhead 06	2700-LN-06-06	2
13	Flange Locknut, 3_8 -16	93298A130	3
14	Elbow Adapter 06x08	6801-06-08	2
15	JIC to O-Ring Elbow 45	6802-08-06	4
16	Lockwasher 1"	91102A038	2

Item	Part Name	Part Number	QTY
17	Wing Valve	F15179A1-XX_REVA	1
18	JIC Swivel Branch Tee	6600-08-08-08	2
19	JIC x JIC x JIC Tee	6602-08-08-08	2
20	08 JIC x 06 SAE Nipple Adapter	6400-08-06	4
21	JIC 90 Elbow 08 x 08	6500-08-08	2
22	08 JIC to 08 O-Ring Swivel Elbow 90°	6801-S-08-08	2
23	Hex Bolt 3/8-16 x 4	92865A641	3
24	1-.375 washer	13W	4
25	O-Ring Hollow Hex Plug 08	6408-HHP-08	2
26	Hex Bolt GR8 1-8 x 7	91257A973	2
27	Hydro Line Mid-Front	HY-307	4
28	Line Valve to Dist. Block, Long	HY-801	4
29	Hydro Line Mid-Front 5000 Series	HY-507	4

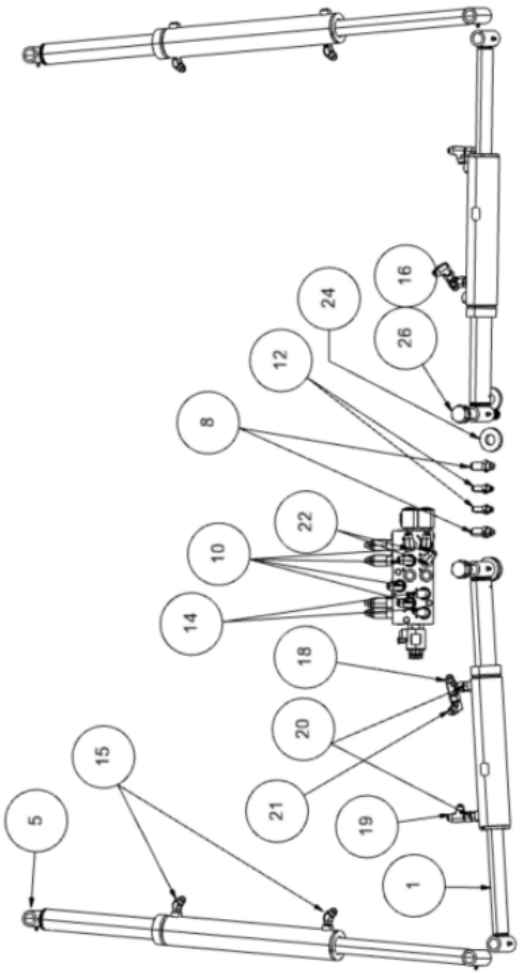

Copyright Kage Innovation All Rights Reserved www.kageinnovation.com (844) 314-KAGE

WING Hydraulic Breakdown

Revision 2024.7.15

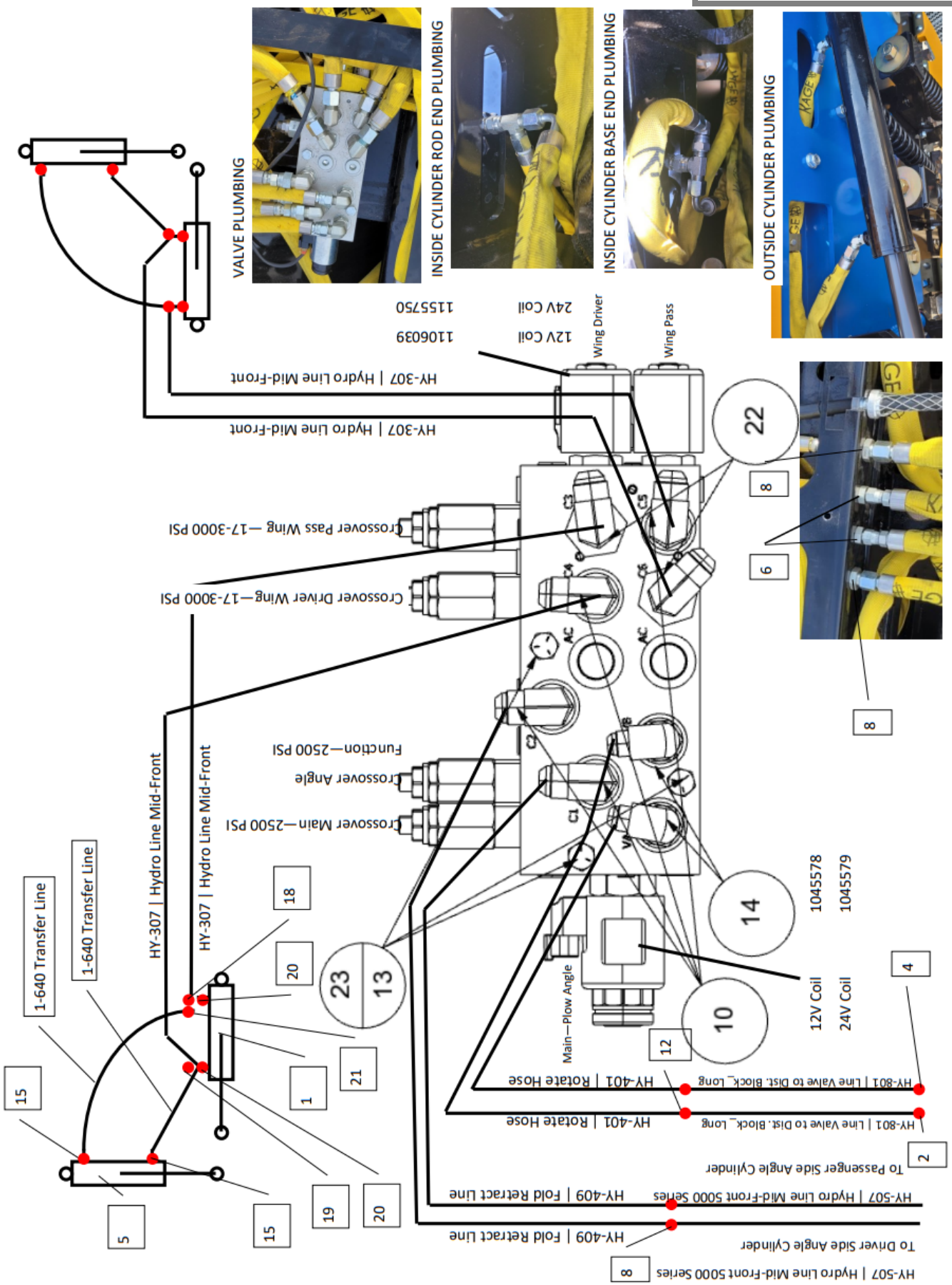

WING Hydraulic Flow and Pressure Adjustments

Revision 2024.7.15

OR1, OR2, OR3, OR4 are flow restrictors in the Wing Valve.

If more flow is needed, the restrictors can be drilled out to the desired size.

Figure A shows the location of the restrictors in the hydraulic circuit, Figures B and C show the location of the restrictors on the valve body.

Figure C also shows where to adjust the pressures.

Wing Valve Hydraulic Diagram (Figure A)

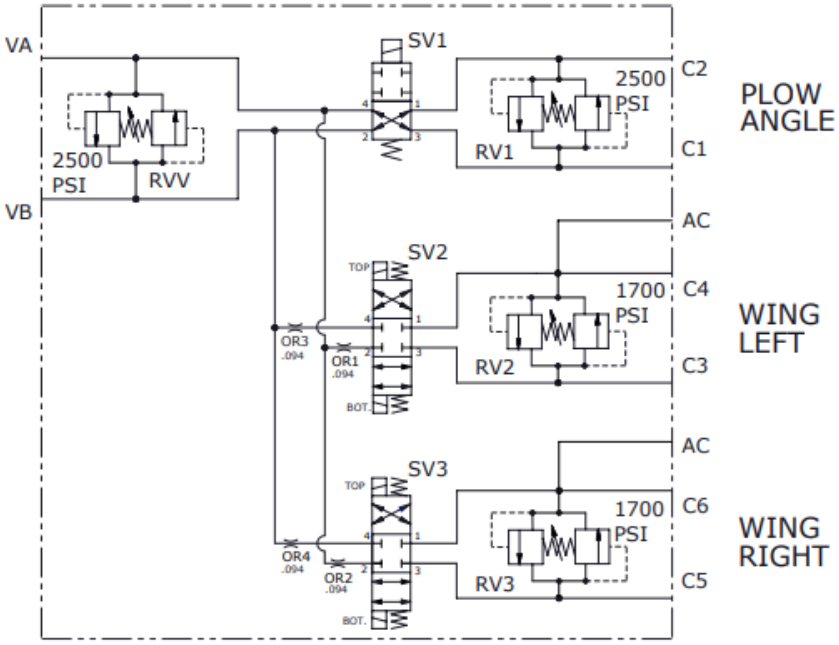

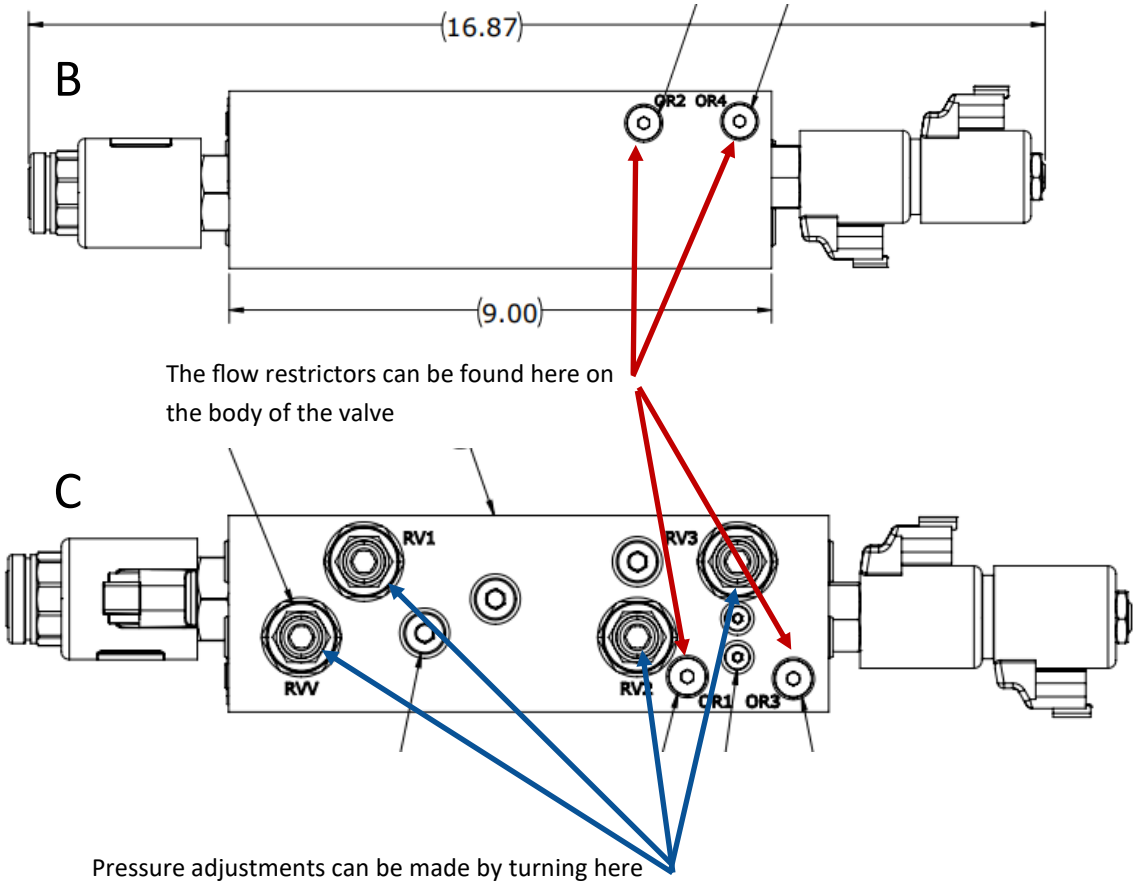

Recharging Oscillation Cylinders

Revision 2024.7.15

1. Locate the hand valve and coupler on top of each accumulator. (Figure A)

2. Take off the rubber caps on the couplers

3. Connect hydraulic pump to the coupler. (Figure B)

4. With the valve on your pump closed, open the hand valve on the plow.

5. Open the valve on your pump until the pressure gauge reads between 700 and 800 PSI.

(Figure C)

6. Immediately close the valve on the pump once the correct PSI is reached.

7. Close the hand valve on the plow.

8. Once both valves are closed, disconnect the coupler and repeat from Step 1 on the other side.

Note: If you let air into the system by replacing hydraulic components, these instructions may have to be repeated several times to maintain the correct pressure in the system.

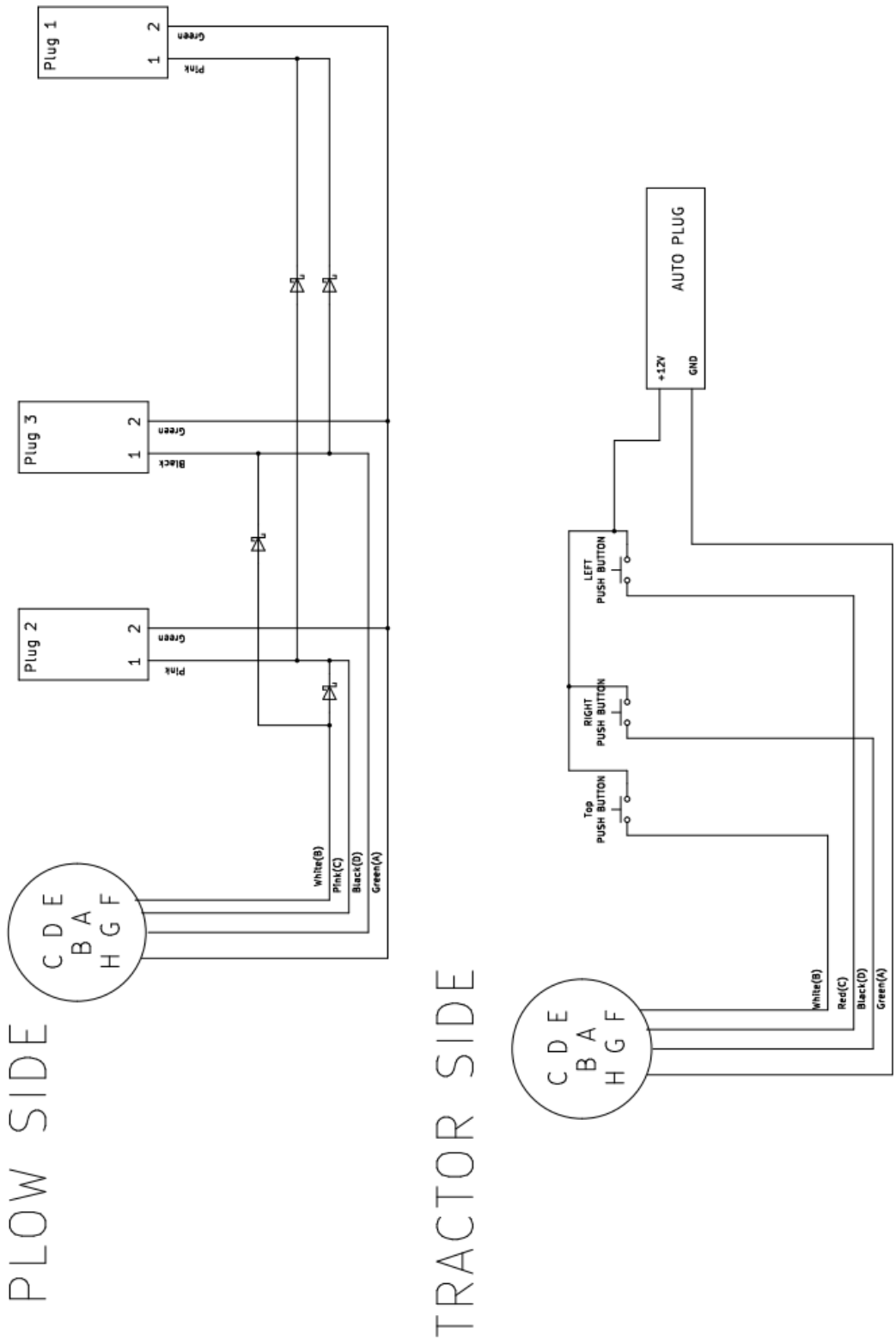
PLOW SIDE
Plug 1
1
2
Pink
Green
Plug 2
1
2
Pink
Green
Plug 3
1
2
Black
Green
C D E
B A
H G F
White(B)
Pink(C)
Black(D)
Green(A)
TRACTOR SIDE
AUTO PLUG
+12V
GND
LEFT PUSH BUTTON
RIGHT PUSH BUTTON
Top PUSH BUTTON
C D E
B A
H G F
White(B)
Red(C)
Black(D)
Green(A)

Kage Limited Warranty

Kage Innovation will repair or, at the option of Kage Innovation, replace those parts which prove defective due to material or workmanship under normal use for a period of two (2) years from the date of retail sale or date of invoice from Kage Innovation, whichever is later. Expendable items, such as rubber, or polyurethane are excluded from this warranty.

Kage Innovation warrants that the products manufactured by us to be in accordance with our published specifications or those specifications agreed to by us in writing at the time of sale. The obligation of Kage Innovation is expressly limited to repairing or replacing, at its option, any product not meeting such specifications within the warranty period.

LIMITATIONS OF WARRANTY AND DAMAGES

KAGE INNOVATION MAKES NO OTHER WARRANTY, EXPRESSED OR IMPLIED, AND MAKES NO WARRANTY OF MERCHANTABILITY OR OF FITNESS FOR ANY PARTICULAR PURPOSE. THERE ARE NO WARRANTIES WHICH EXTEND BEYOND THE FACE HEREOF.

IN NO EVENT SHALL KAGE INNOVATION, BE HELD LIABLE FOR SPECIAL, INCIDENTAL OR CONSEQUENTIAL DAMAGES OR FOR DAMAGES RESULTING FROM MISAPPLICATION, ABUSE, MISUSE, ACTS OF GOD, UNAUTHORIZED ALTERATION OF THE KAGE INNOVATION PRODUCT, OR SUBSTITUTION OF PARTS NOT AUTHORIZED IN WRITING BY KAGE INNOVATION.

To obtain service under this warranty the consumer must return the defective Kage Innovation product to Kage Innovation directly, the dealer from which the product was purchased or to any authorized Kage Innovation dealer, transportation and freight charges prepaid. Only Kage Innovation dealers are authorized to perform the obligations under this warranty with pre-authorization from Kage Innovation.

No person is authorized to alter or amend this warranty or to create any warranty other than that set forth herein without the expressed written consent of Kage Innovation.

Kage Innovation reserves the right to make improvement changes on any of our products without prior notice.

Revision Comments

Date	Name	Description
11-29-2023	Mike	Updated snowcatch angle and side support for the SnowKAGE box
11-29-2023	Mike	Added 2 missing 5/8 carriage and locknuts to SnowKage BOM
5-7-2024	Josh	Added 3-point version drawings and BOM
5-14-2024	Mike	Added spec sheet for 2 in 1 system and spec for Wing
7-15-2024	Josh	Created new manual
10-10-2024	Mike	Added instructions for mounting wing harness & 2024 fall updates
11/8/2024	Mike	Added Electrical Schematic and updated Wing Hydro Schematic & Break-down
1/3/2025	Josh	Added locking collars to SDM8 breakdown
1/8/2025	Josh	Added Hinge Block description
1/16/2025	Josh	Updated SDW60 breakdown
2/28/2025	Josh	Added spring compression measurements
4/4/2025	Josh	Updated WHK-SD breakdown
7/18/2025	Josh	Split SD manual into separate WING and 2-in-1 manuals
9/3/2025	Josh	Uploaded separate WING owners manual
9/24/2025	Josh	Updated SDW breakdowns, pages 19-24
9/26/2025	Josh	Updated SDC breakdown, pages 13-14